BRUSA

TECHNICAL DATA AND START-UP

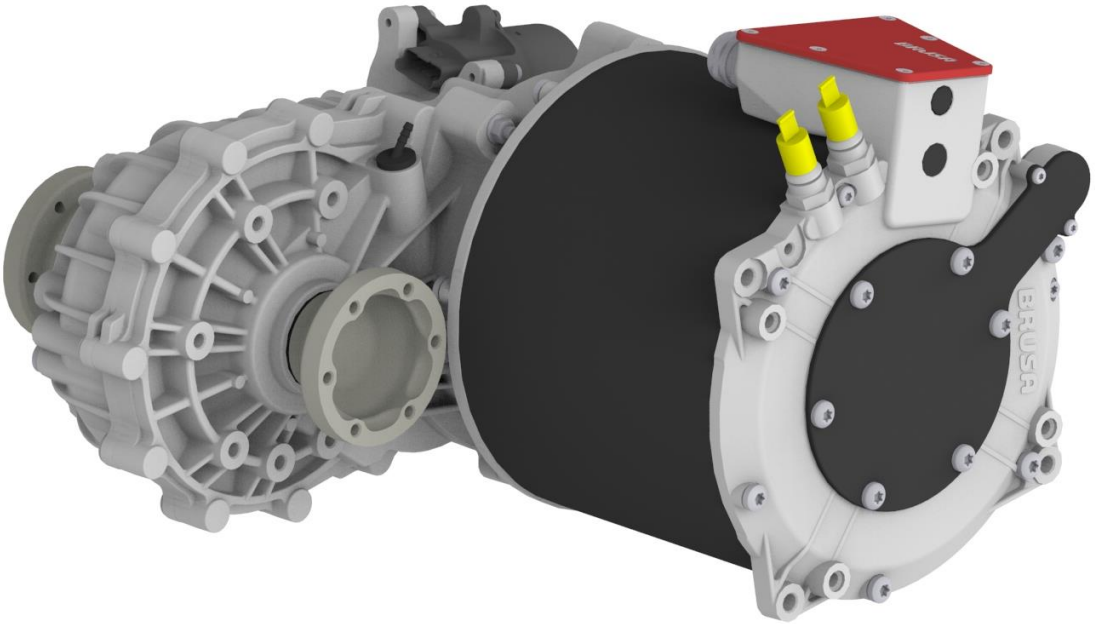

DTSO1-096

Translation of the original German operating instructions

www.brusa.biz

BRUSA Elektronik AG
Neudorf 14
CH-9466 Sennwald
+41 81 758 19 00
info@brusa.biz

LEGAL NOTICE

Publisher	BRUSA Elektronik AG Neudorf 14 CH-9466 Sennwald T +41 81 758 19- 00 Fax: +41 81 758 19 - 99 www.brusa.biz office@brusa.biz
Date of issue	06.01.2016
Copyright	**© 2011** The content of this document may not be passed on to third parties without the written authorisation of the company BRUSA Elektronik AG - not even in extracts. Any technical information, drawings and photos used are copyrighted and failure to respect this constitutes a punishable offence!
Updates	In light of the further technical development of our products, we reserve the right for structural changes. Any changes will be disclosed in the relevant manuals through the replacement of the relevant pages and/or a revision of the electronic data storage device.
Writer / Author	Marc Voppichler

REVISIONS

REVISION	DATE	NAME	CHANGE	RELEASE
rev08	07.05.2015	F. Müller	Update to DTSO1	
rev09	14.08.2015	M. Voppichler	Parking lock, GKN PLS Prototype ECU and basic function added	
rev10	28.12.2015	M. Voppichler	Update of all pictures to the new Gearbox finished, list of combinations updated, changed all old designations, adaption of all texts and tables	
rev11	04.01.2016	M. Voppichler	Finishing: - Technical data updated - Chap. 6.7.7 updated - Chap. 6.7.4 updated - Chap. 7 updated	Ph. Lüchinger
rev12	13.05.2016	M. Voppichler	Updated delivery contents Added some warning instructions Added Chap. 10 *Flooding in the device*	
rev13	27.06.2016	M. Voppichler	- 6.2.11 & 6.2.12 added - new gear oil	
rev14	28.11.2016	A. Girod	Chap. 13 updated; Chap. 14 new	
rev15	14.08.2018	M. Voppichler	Update Chap. 4.4 *Optional delivery content*	

VALIDITY

This manual is only valid for the following motor/gear box combinations:

MOTOR TYPE
DTSO1-096-HSM1-10.18.13-A01
DTSO1-096-HSM1-10.18.04-A01
DTSO1-096-HSM1-6.17.12-A01
DTSO1-096-ASM1-6.17.12-A01

Decoding of the motor designation is as follows:

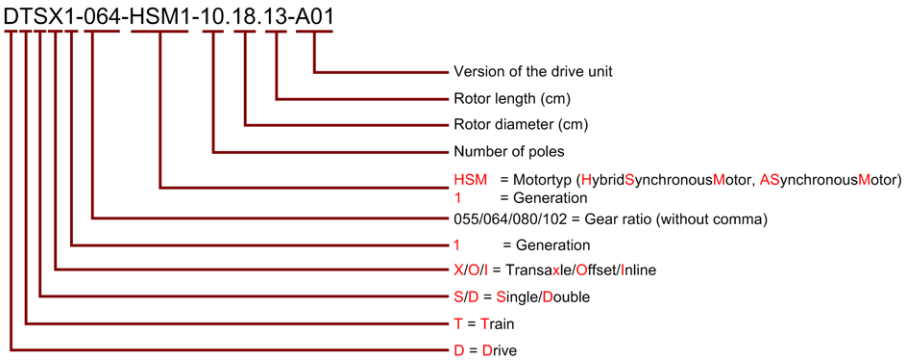

TABLE OF CONTENTS

1 Foreword

Dear customer!

With the BRUSA drive unit you have obtained a very capable and versatile product. As this is a component of high performance electronics, we require specialist knowledge in the dealing with as well as the operation of the product!

Read this manual – particularly the chapter *Safety and Warning Instructions* – carefully before you install the drive unit or carry out any other work on it!

2 List of abbreviations

Throughout this manual, some specific technical abbreviations are used. You will find an overview as well as their meaning in the following table:

ABBR.	MEANING	ABBR.	NAME
HSM	**H**ybrid **S**ynchronous **M**otor	**NTC**	Resistor with **N**egative **T**emperature **C**oefficient
GND	Minus wiring System, vehicle earth Terminal 31	**PDU**	**P**ower **D**istribution **U**nit (HV distribution box)
HV	**H**igh **V**oltage, DC Link Voltage	**PTC**	Resistor with **P**ositive **T**emperature **C**oefficient
LV	**L**ow **V**oltage	**PWM**	**P**ulse **W**idth **M**odulation

3 Safety and warning instructions

In this chapter you will find safety instructions which apply to this device. These refer to assembly, start-up and running operation in the vehicle. Always read and observe these instructions in order to protect people's safety and lives and to avoid damage to the device!

3.1 Symbols and their meaning

Throughout this manual, some specific technical symbols are used. You will find an overview as well as their meaning in the following table:

SYMBOL	MEANING	SYMBOL	MEANING
	General prohibition		Warning high voltage Touching forbidden
	Switching on forbidden		

SYMBOL	MEANING	SYMBOL	MEANING
	General hazard warning		Electromagnetic field warning
	Potentially explosive warning		Battery hazard warning
	Hot surface warning		High electrical voltage warning
	High pressure warning / fluid spurting out		Fire hazard warning

SYMBOL	MEANING	SYMBOL	MEANING
	Disconnect device from voltage		Disconnect device from mains

SYMBOL	MEANING	SYMBOL	MEANING
	Important information on avoiding possible damage to property		Important information

3.2 Safety instructions and danger levels

DANGER
This instruction warns against serious, irreversible risks of injury and in some cases death! Avoid these dangers by observing these instructions!

WARNING
This instruction warns against serious, irreversible risks of injury! Avoid these dangers by observing these instructions!

CAUTION
This instruction warns against serious, irreversible risks of injury! Avoid these dangers by observing these instructions!

INSTRUCTION
This instruction warns against possible damages to property if the following instructions and work procedures are not observed.

INFORMATION
This type of instruction discloses important information for the reader.

3.3 Generally applicable safety measures

The following safety measures have been developed based on the knowledge of the manufacturer. They are not complete, they can be supplemented by local and/or country-specific safety instructions and guidelines for accident prevention!

The system integrator and/or distributor of the device must therefore supplement the present general safety instructions by country-specific and local guidelines.

3.3.1 Safety instructions for cooling water systems

WARNING	
	**Spurting cooling fluid!** **Skin burning hazard!** Check the tightness of the cooling water system, particularly the pipes, screw joints and pressure tanks. Resolve recognisable leakages immediately!

3.3.2 Safety instructions for mechanical systems

DANGER	
	**Potential explosion area!** **Danger to life!** Do not store any highly flammable materials or combustible fluids in the direct surroundings of the device! Sparks at the device connections can set these on fire and lead to explosions!

CAUTION	
	**Hot surfaces!** **Burn hazard!** The device produces high temperatures when in operation! Handle the device with care and caution!

3.3.3 Safety Instructions for handling and operation

INSTRUCTION
➢ A high cooling water temperature reduces the life span! So take ongoing care to ensure sufficient cooling of the device! ➢ Under no circumstances should you use cleaning agents containing solvents to clean the motor! These can damage the seals and lead to leaks in the motor! ➢ Do not place the device in direct sunlight and in close proximity to heat sources! ➢ Although if the device has high IP protection, you should avoid placing it in direct contact with water (rain, spurting water) if possible! ➢ Under no circumstances should you put a low-resistance connection between the HV contacts, the housing contacts and the LV contacts! This will lead to malfunctions and furthermore to the destruction of the device! ➢ Prevent any penetration of fluids into the device (e.g. during assembly work)! The penetration of fluids will lead to a short circuit and subsequent damage to the device! ➢ Under no circumstances should you operate the device if liquid is leaking in anywhere. Refer immediately to the company BRUSA Elektronik AG! ➢ During installation and the laying of cables, observe the maximum bending radii given by the manufacturer! Avoid laying the cables alongside sharp edges and mechanical components!

3.3.4 Safety instructions for electrical systems

DANGER


High voltage!
Danger to life!

- Under no circumstances should you touch the HV wires or HV connections without ensuring that there is no voltage beforehand!
- The device may only be connected by a qualified electrician!
- Under no circumstances should you bypass or avoid security installations! Any malfunctions resulting from this could have life threatening consequences!
- Always use an insulation monitoring unit for ongoing monitoring of the galvanic isolation between HV and LV circuits!
- Before starting work with the device, the shut-down of the coupled motors must be ensured! Even when the HV supply is switched off, a turning motor can still produce voltage!

INSTRUCTION

Under no circumstances should the device be opened without authorisation! The opening of the device (housing sealed-up) leads directly to the forfeit of any guarantee and warranty rights!

INFORMATION

Adhere strictly to the following 5 safety rules when working on an HV grid:

- Disconnect system from power.
  - → Switch off the ignition.
  - → Remove service / maintenance plug and/or turn off main battery switch.
  - → Remove fuse.
- Ensure that the system does not reconnect.
  - → Keep ignition key safe to prevent unauthorised access.
  - → Keep service / maintenance plug safe to prevent unauthorised access and/or use lockable cover cap to ensure that the main battery switch does not reconnect.
- Check that it is not live with a suitable voltage tester (note voltage range!).
- Ground and short-circuit the system.
- Cover or seal off adjacent live parts.

3.4 Safety installations / power limitations

3.4.1 Derating

This security installation is the motor's self-protection. If the motor reaches a defined temperature, this means a decrease in power (derating) to protect the motor from damage through overheating. The power will subsequently be reduced until the temperature falls back to the target range.

The temperature measurement takes place through an NTC in the stator winding head. Derating becomes active at around 100°C through the variable resistance value. The inverter processes the signal from the motor and begins to gradually reduce the phase current from this motor temperature onwards:

- at a temperature of ≤ 100°C → I_max
- at a temperature of ≥ 160°C → I = 0 A

3.4.2 Overload protection

If the motor reaches the defined maximum temperature of 170°C despite derating, an emergency shut-down (overload protection) takes place to protect the motor from damage.

The temperature measurement takes place through 3 PTCs in the stator winding head (1 unit per phase). If one of the PTCs reaches the defined maximum value, the linked up inverter recognises this and transmits via CAN the error message *E_TempMot*. In this case the inverter disconnects the phase current immediately.

To resume operation, the fault in the linked inverter must be acknowledged.

3.5 Requirements of the start-up personnel

All courses of action described in this manual may only be carried out by a qualified electrician! Specialist staffs are defined as electricians who dispose of

- professional training,
- knowledge and experience in the field of electronics / electric mobility,
- as well as knowledge of relevant requirements and dangers

which they can display in practice. Furthermore, they must be able to assess the work assigned to them independently, detect possible dangers and establish necessary protection measures.

4 General

4.1 Content and scope of this manual

The present documentation gives the reader an overview of all required working steps in the installation and operation of the device and the safety measures necessary for these.

Furthermore, you can find technical information, usage information and a basic description of the motors and the gearbox.

The operational and safety instructions given in the previous chapters must be strictly adhered to in order to ensure the ongoing optimum functioning of the motors and to meet the guarantee requirements of BRUSA Elektronik AG.

All work sequences and illustrations are based on the HSM1–6.17.12 model and are applicable to all models mentioned in this handbook. In the case of model-specific deviations, corresponding instructions are available.

4.2 Scope of the entire documentation

INFORMATION	
	To set the motor up successfully, besides this manual you will need the appropriate motor table for this motor! The motor table is usually included in the delivery content and must be loaded onto the linked up inverter (see the technical information for the inverter).

4.3 Delivery contents

INFORMATION
The components stated below are contained in the delivery and are necessary for the start-up! In the case of possible missing parts, please refer to the manufacturing address given in chapter *4.6*.

INFORMATION
For 70mm^2 cables you can use 50mm^2 cable lugs too. The diameter of 70mm^2 cables fits without problems into 50mm^2 cable lugs and is qualified by BRUSA Elektronik AG.

	NAME	PIECES	ILLUSTRATION
1.	HSM1 hybrid synchronous motor or ASM1 asynchronous motor	**1**	
2.	GSO1 gear box (Transmission ratio 1:9.59)	**1**	
3.	Cable lugs for HV-cables (depending on the motor): 25mm^2 M6 cable lug without insulation for HSM1-10.18.04 35mm^2 M6 cable lug without insulation for HSM1-06.17.12 35mm^2 M6 cable lug without insulation for ASM1-06.17.12 50mm^2 M6 cable lug without insulation for HSM1-10.18.13	**3**	
4.	Cable lug for grounding (depending on the motor): 25mm^2 M8 cable lug without insulation for HSM1-10.18.04 35mm^2 M8 cable lug without insulation for HSM1-06.17.12 35mm^2 M8 cable lug without insulation for ASM1-06.17.12 50mm^2 M8 cable lug without insulation for HSM1-10.18.13	**1**	
5.	M8x10 hexagonal screw (Ground GND)	**1**	
6.	M8 washer for grounding screw	**1**	
7.	Cable length of sensor cable: 1m (Connection Motor / Inverter)	**1**	
8.	Quick connection cooling water connection pieces 90° Norma PS3 *Cooling Water Pressure Drop around 150 mbars* For dimensions see chapt. *6.10.2 Cooling water connections*	**2**	

4.4 Optional delivery contents

INFORMATION
These accessories can be obtained optionally from BRUSA Elektronik AG.

	MEANING	TYPE	ILLUSTRATION
1.	Special key for HV cable fitting	**RAAA041**	---
2.	Quick connection cooling water connection pieces 0° Norma PS3 *cooling water pressure drop around 140 mbars* For dimensions see chapt. *6.10.2 Cooling water connections*	**MHAA775**	
3.	M18 x 1.5 cooling water connection pieces *Cooling Water Pressure Drop around 105 mbars* For dimensions see chapt. *6.10.2 Cooling water connections*	**MAAA366**	
4.	14 pole Lemo connecting cable (inverter - motor) 1 m	**11139**	
5.	14 pole Lemo connecting cable (inverter - motor) 2 m	**11140**	
6.	14 pole Lemo connecting cable (inverter - motor) 4 m	**11141**	
7.	Plug for parking lock sensor	**---**	---
8.	GKN PLS Prototype ECU (Controller for parking lock)	**15646**	

4.5 EU Guidelines

This manual has been produced under application and consideration of the DTSO1-096 Drivetrain EC guidelines, national laws and harmonised standards (EN) valid at the time of production relevant to the product.

4.6 Contact information of the manufacturer

BRUSA Elektronik AG
Neudorf 14
9466 Sennwald
Switzerland

Phone: +41 81 758 09 - 00
Fax: +41 81 758 09 - 99
Internet: www.brusa.biz
E-mail: support@brusa.biz

5 Use and limits of the product

5.1 Proper use

The BRUSA DTSO1-096 has been designed for the following uses. In the case of planned operations in other areas, please contact the company BRUSA Elektronik AG beforehand at the manufacturer address as given in chapt. *4.6*.

- Installation in a drive train for hybrid vehicles
- Full drive for electric vehicles / Linking up with several hybrid synchronous motors possible
- Installation in a drive train for fuel cell vehicles
- Use as a high performance drive (racing sports)
- Full drive for electric motorbikes
- Full drive for utility vehicles (electric and hybrid)
- Full drive for electric boats
- Test stand applications

INFORMATION	
	This equipment is a custom built evaluation kit destined for professionals to be used solely at research and development facilities for such purposes.

5.2 Improper use / limits of the product

The carrying out of applications which do not conform to the conditions and requirements stated in the technical documents and datasheets of the manufacturer is viewed as improper use.

The following limit values are set for the operation of the DTSO1-096. Operation outside of the defined limits can lead to life-threatening situations!

- Max HV input voltage (operation): 450 V
- Max. permitted phase voltage: 690 V_{ACeff}
- Min. ambient temperature: – 40°C
- Max. ambient temperature: + 85°C
- Min. coolant temperature at Inlet: – 40°C
- Max. coolant temperature at Inlet: + 65°C
- Max. cooling circuit pressure: 1.0 bar

6 About this device

6.1 Technical data

BASIC DRIVETRAIN DATA	DTSO1-096-HSM1-6.17.12		DTSO1-096-HSM1-10.18.13		DTSO1-096-HSM1-10.18.04		DTSO1-096-ASM1-6.17.12		UNIT
	360 V	400 V	360 V	400 V	360 V	400 V	360 V	400 V	
Type of final drive	Offset	Offset	Offset	Offset	Offset	Offset	Offset	Offset	
Transmission	1:9.59	1:9.59	1:9.59	1:9.59	1:9.59	1:9.59	1:9.59	1:9.59	---
Maximum power	87	96	140	150	45	50	95	107	kW
Continuous power (ECE R85) at 25°C*	64	70	83	93	27	29	45	50	kW
Max. input speed gear box	12’000	12’000	13’000	13’000	13’000	13’000	11’000	11’000	rpm
Max. output speed gear box	1’250	1’250	1’355	1’355	1’355	1’355	1’147	1’147	rpm
Continuous output torque (ECE R85) at 25°C*	1’210	1’210	1’535	1’535	500	500	790	790	Nm
Max. Input torque	220	220	270	270	98	98	270	270	Nm
Max. Output torque	2100	2100	2500	2500	910	910	2500	2500	Nm
Inverter current	300	300	400	400	150	150	440	440	Aeff

*coolant temperature

BASIC ELECTRICAL DATA	DTSO1-096-HSM1-6.17.12	DTSO1-096-HSM1-10.18.13	DTSO1-096-HSM1-10.18.04	DTSO1-096-ASM1-6.17.12	UNIT
Compatible inverter	DMC524	DMC534	DMC514	DMC534	—
Recommended input voltage of device (min / max)	300 - 450	300 - 450	300 - 450	300 - 450	V
Level of motor efficiency	95	95	95	91	%
Level of gear box efficiency	97	97	97	97	%

CONNECTIONS	DTSO1-096-HSM1-6.17.12	DTSO1-096-HSM1-10.18.13	DTSO1-096-HSM1-10.18.04	DTSO1-096-ASM1-6.17.12	UNIT
Phases U, V, W: 3 M6 cable lugs, recommended cable diameter	35	50	25	35	mm^2
Ground GND M8 cable lug, recommended cable diameter	35	50	25	35	mm^2
Motor sensor connector pin number	14	14	14	14	—

BASIC MECHANICAL DATA	DTSO1-096-HSM1-6.17.12	DTSO1-096-HSM1-10.18.13	DTSO1-096-HSM1-10.18.04	DTSO1-096-ASM1-6.17.12	UNIT
Total length	501	501	390	501	mm
Total width	455	455	455	455	mm
Total height	326	326	326	326	mm
Weight (without gear oil)	75.3	75.8	25	79.7	kg
IP protection	IP67	IP67	IP67	IP67	——

THERMAL / COOLING SYSTEM	DTSO1-096-HSM1-6.17.12	DTSO1-096-HSM1-10.18.13	DTSO1-096-HSM1-10.18.04	DTSO1-096-ASM1-6.17.12	UNIT
Coolant mixture ratio (water / glycol)	50 / 50	50 / 50	50 / 50	50 / 50	——
Derating temperature range	132 - 160	117 - 160	117 - 160	117 - 160	°C
Maximum operational temperature (activation of overload protection)	170	170	170	170	°C
Amount of coolant in device	0.6	0.6	0.4	0.6	l
Minimum coolant temperature at inlet	- 40	- 40	- 40	- 40	°C
Maximum coolant temperature at inlet	65	65	65	65	°C
Flow rate	6 - 8	6 - 8	6 - 8	6 - 8	l/min
Pressure drop @ 6l / min $T_{coolant}$ = 25°C *(at standard Norma PS3 90° quick connector)*	ca. 150	ca. 150	ca. 120	ca. 150	mbar
Ambient temperature range for storage	- 40...+85	- 40...+85	- 40...+85	- 40...+85	°C
Ambient temperature range in operation	- 40...+85	- 40...+85	- 40...+85	- 40...+85	°C

GSO1 GEAR BOX INFORMATION	GSO1	UNIT
Oil type	Fully synthetic SAE 75W-80; API GL4/5	
Oil-fill capacity	750 +/- 50	ml
Total length	450	mm
Total width	260	mm
Total height	259	mm
Transmission	1:9.59	---
Max. speed (number of revolutions)	14‘000	rpm
Weight (without oil)	23.8	Kg
Max. output torque	2‘500	Nm
Max. torque on park lock lever	2.3	Nm
Engagement speed parking lock	≤ 2	km/h

6.2 Function

6.2.1 Basic function HSM1 hybrid synchronous motor

The HSM1 hybrid synchronous motor is a water-cooled 3-phase AC motor. The motor is based on the combination of a permanent synchronous motor and a reluctance motor whereby the advantages of both versions have been coordinated and combined with one another. The HSM works with internal magnets which have an optimum flow direction at low magnetic resistance due to a self-developed alignment to one another.

Through this a remarkably high and consistent power delivery can be achieved while using less energy. The power delivery takes place over a large speed range. In addition, the HSM1 is extremely efficient and is best suitable for use as a traction drive with constant transmission ratio. With these properties, the HSM1 is a very good choice for drive systems which require constant and high power over a large speed range.

To achieve optimum results with this motor, it is paramount that the connected inverter is exactly adjusted to the motor. Inverters of the company BRUSA Elektronik AG are already specially optimised for use in these motors.

6.2.2 Basic function ASM1 asynchronous motor

The ASM1 asynchronous motor is a water-cooled 3-phase AC motor. The ASM1 is based on an exceptionally large copper pressure-cast rotor which helps the motor to achieve an extremely high level of efficiency at minimal slip. The design of the ASM1 has been optimised in such a way that power drops in the field weakening range (speed range > 4500 rpm) are minimised. The ASM1 is therefore predestined for use in vehicles which require high power even in the lower speed range (urban operation) and then go on to reach higher final speeds.

To achieve optimum results with this motor, it is paramount that the connected inverter is exactly adjusted to the motor. Inverters of the company BRUSA Elektronik AG are already specially optimised for use in these motors.

6.2.3 Basic function of the DTSO1 gear box

The DTSO1 gear box is attached on the left (left of the driving direction) of the motor. The gear box is basically made up of two drive shaft flanges and a differential. Because an electric motor does not generate a torque when idle, a clutch between the motor and the gear box is not necessary. In all gear box versions there is a fixed transmission (final drive) with the ratio 9.59.

The gear turns in the reverse direction while reversing. During this, the speed should be limited to 50km/h for safety reasons.

To secure the vehicle against rolling away, a mechanical parking lock is installed. The parking lock can be electronically monitored with a sensor.

6.2.4 Position sensor

The position sensor is located between the posterior end-shield and the end-shield cover. The position sensor transmits the position and speed information of the rotor via the motor sensor connection on the inverter. The NTC and PTC resistors are connected to the inverter over the motor sensor connection as well.

6.2.4 Parking lock

The park lock actuator is an electronically controlled actuator, which is able to generate a form fit which blocks the drive train to prevent an unintended moving of the vehicle. The form fit is achieved by moving the park pawl (5) towards the park gear (1). During engagement the actuator releases the spring preloaded cone (2), which allows the pawl to engage with the park wheel (1). As soon as the park pawl (5) finds a gap the park lock will lock the drive train.

During unlock the actuator pushes the cone (2) back. The park pawl (5) will be pushed back by the separating forces of the park gear (1) and the leg spring (6).

In case of a malfunction, the actuator (8) can be released manually using a tool (4mm hexagon), at the end of the E-Motor housing, which is accessed by removal of the rubber sealing cap (10).

Belleville Spring (9) and washer on the actuator are implemented to reduce the impact during calibration.

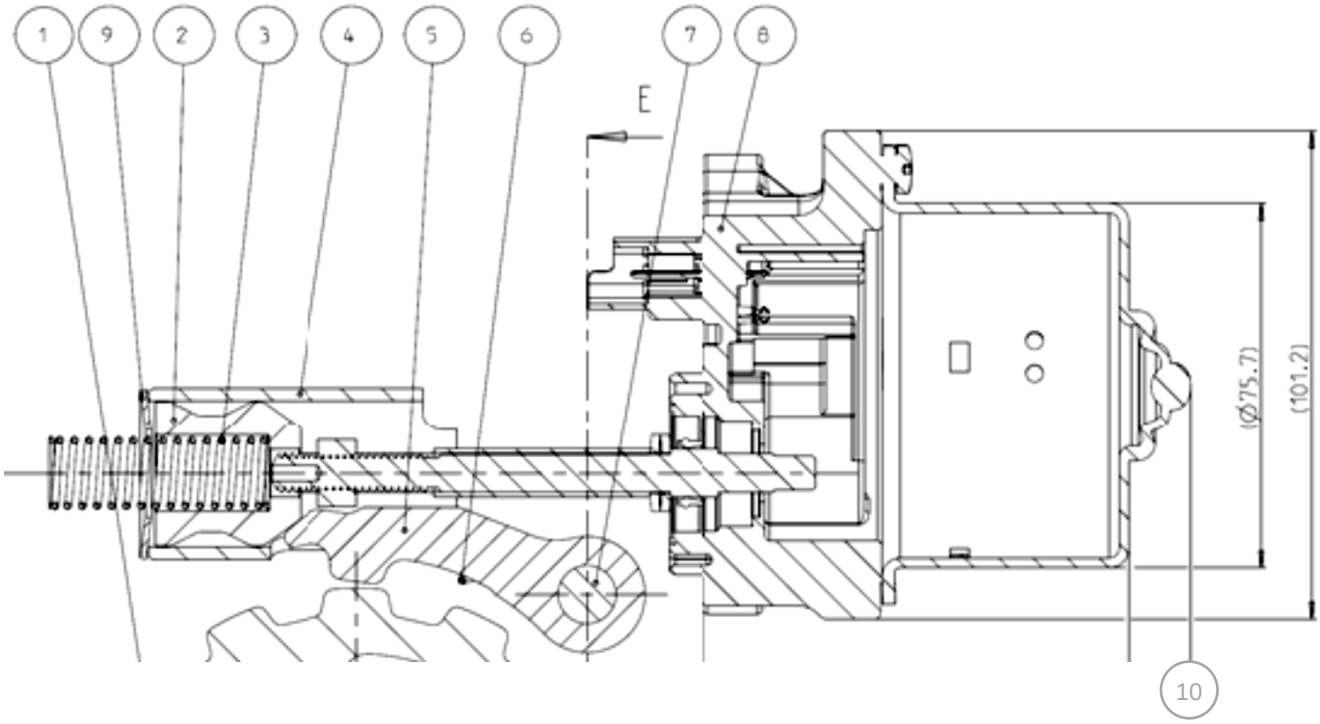

6.2.5 GKN PLS Prototype ECU

The parking lock of the gearbox is controlled by the GKN PLS Prototype ECU System. The actuator is controlled via CAN commands.

6.2.6 ECU Key Facts

TOPIC	SPECIFICATION
Temperature	-40°C … +85°C
Class of protection	IP30
Functional Voltage	9V … 16V
Max. RMS Current	40A
Quiescent Current	≤100µA
Vibration	Interior
Connector	AMP 967362-1
µC	Motorola MC9S12DJ128
Memory	8 kB RAM 128 kB Flash ROM 2 kB EEPROM
CAN	CAN 1: High Speed (Bosch CF160) CAN 2 (optional): High Speed (Bosch CF151)
I/O's	Motor Power Output (H-Bridge) Position Sensor Supply & Ground 2x Digital Highside Inputs (Position Sensor Signals) 2x Analogue Inputs (NTC Temperature Sensor)
Weight	255g

6.2.7 ECU Dimensions

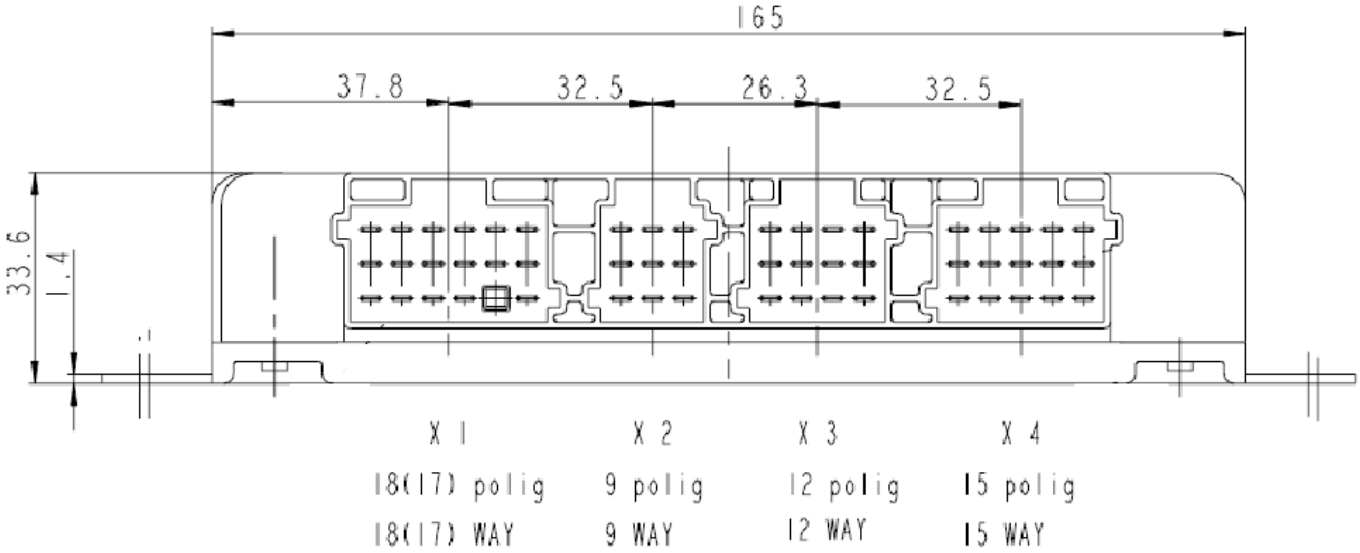

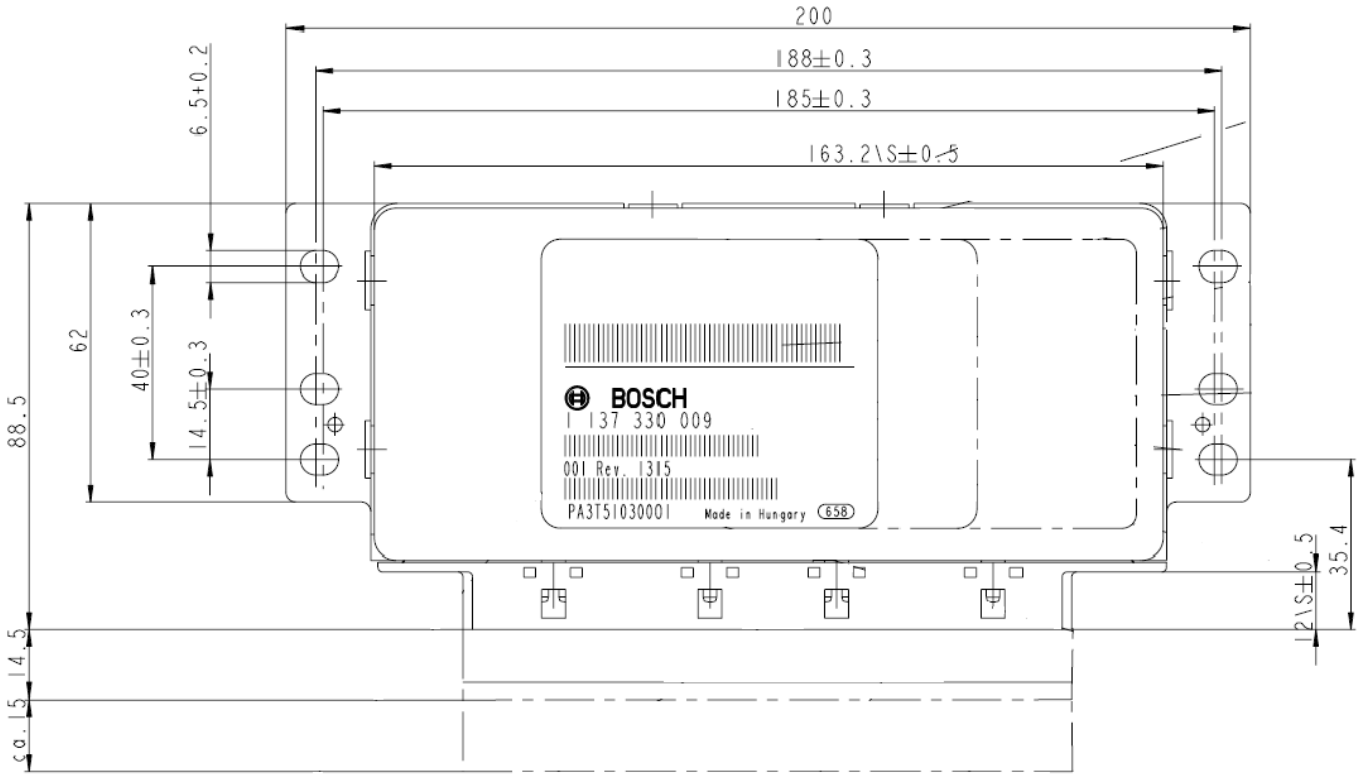

6.2.8 Parking lock block diagram

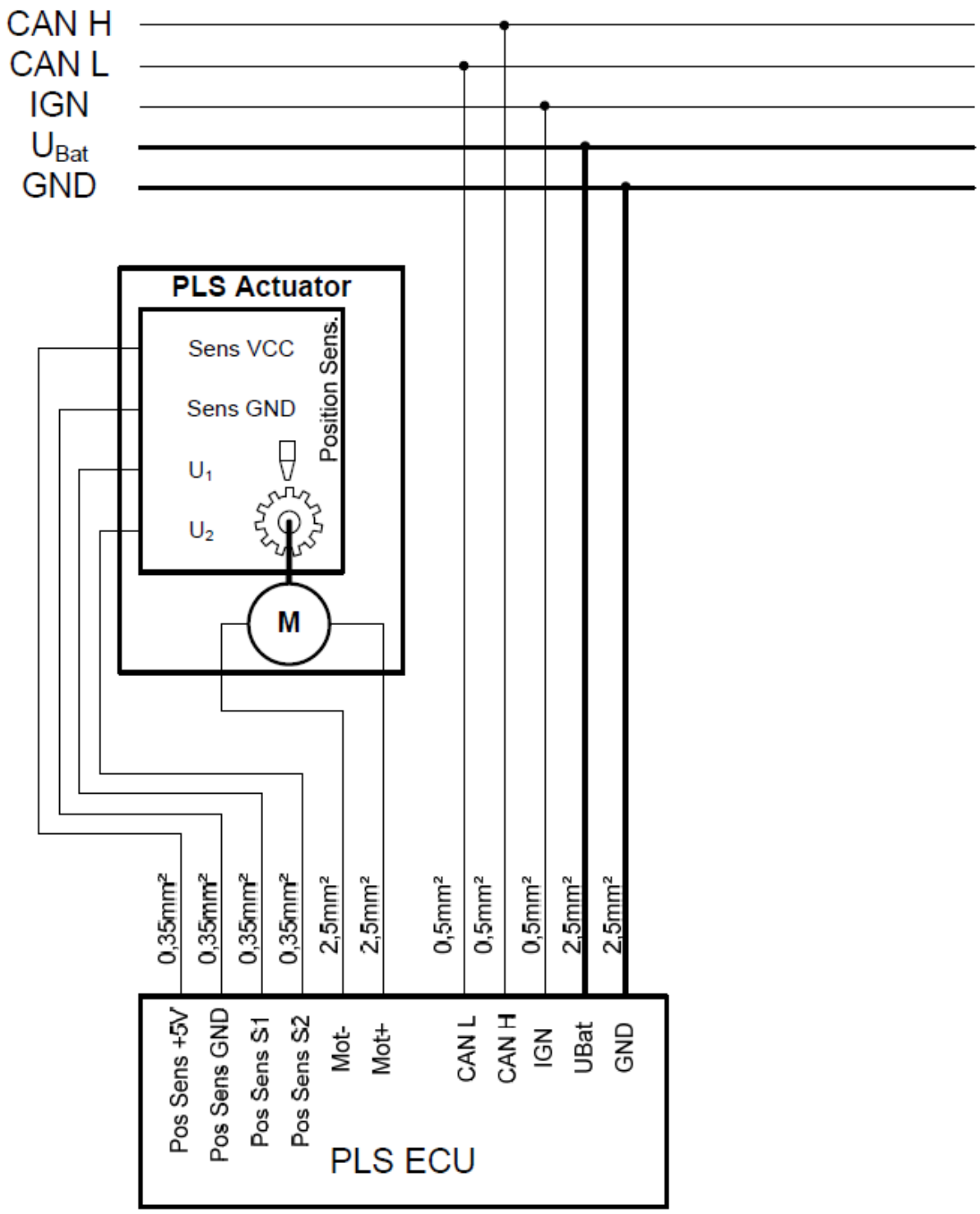

6.2.9 ECU connector PIN out

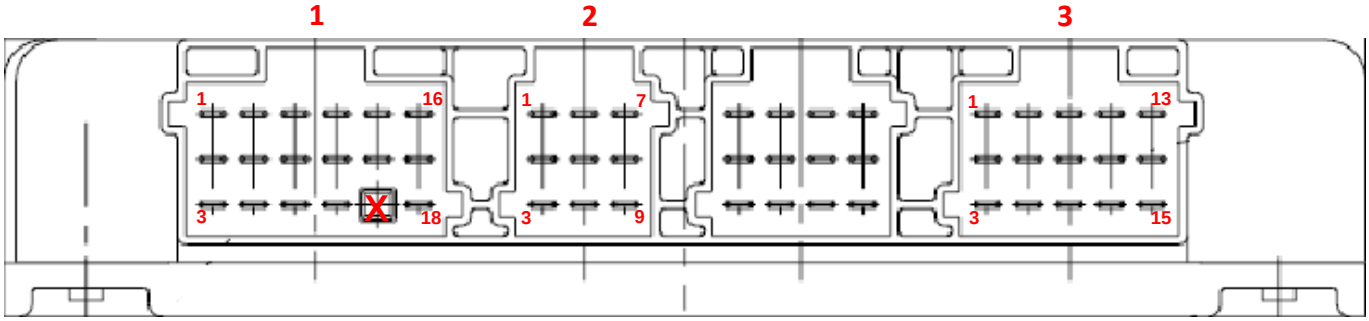

CONNECTOR 1 (BLACK) (18 PIN) (TYCO (PART NR: 135 5204-1))						
Pin	**Circuit Name**	**Gauge**	**Color**	**Circuit Function**	**Load charakteristics**	**Current**
1	Hall Sensor supply	0.35mm^2	tbd	Supply voltage of double hall position sensor	7V DC constant	
2	n.c.					
3	Motor +	2.5mm^2	tbd	Motor supply line 1	PMW duty	~10A
4	Hall Sensor input 1	0.35mm^2	tbd	Digital square wave signal 1 for motor position	Square wave signal	
5	n.c.					
6	Motor -	2.5mm^2	tbd	Motor supply line 2	PMW duty	~10A
7	Hall Sensor input 2	0.35mm^2	tbd	Digital square wave signal 2 for motor position; phase shift of 90° compared with signal 1 for detection of direction	Square wave signal	
8	n.c.					
9	n.c.					
10	Hall Sensor ground	0.35mm^2	tbd	Electronic Ground of double hall position sensor	Electronic ground	
11	n.c.					
12	n.c.					
13	n.c.					
14	n.c.					
15	n.c.					
16	n.c.					
17	n.c.					
18	n.c.					

INSTRUCTION

Current of Pins 3 and 6 have to be limited by PMW

CONNECTOR 2 (YELLOW/BLACK) (9 PIN) (TYCO (PART NR: 1-967 621-1))						
Pin	**Circuit Name**	**Gauge**	**Color**	**Circuit Function**	**Load charakteristics**	**Current**
1	n.c.					
2	n.c.					
3	Module GND supply	2.5mm^2	tbd	ECU Ground		
4	Ignition supply to the module	0.5mm^2	tbd	Ignition signal		
5	n.c.					
6	n.c.					
7	n.c.					
8	Module Power supply	2.5mm^2	tbd	ECU Power supply	9V DC … 16V DC	40A
9	n.c.					

INSTRUCTION

Pin 8: PWM Power Stage output have to be limited by duty cycle to decrease max. current to ~10A

CONNECTOR 3 (PURPLE) (15 PIN) (TYCO (PART NR: 1-967 623-1))						
Pin	**Circuit Name**	**Gauge**	**Color**	**Circuit Function**	**Load charakteristics**	**Current**
1	n.c.					
2	CAN in Low	0.35mm^2	tbd	High Speed CAN 1 – LOW		
3	n.c.					
4	n.c.					
5	CAN in High	0.35mm^2	tbd	High Speed CAN 1 – HIGH		
6	n.c.					
7	n.c.					
8	n.c.					
9	n.c.					
10	n.c.					
11	n.c.					
12	n.c.					
13	n.c.					
14	n.c.					
15	n.c.					

INSTRUCTION

The CAN Interface has no terminal resistance assembled. The terminal resistance shall be placed in the wireharness.

6.2.10 ECU software Information (CAN commands)

6.2.10.1 Limitations

- Signal CRC_PLS_ST in CAN message “PLS Status” is not supported
- Signal CRC_PLS_REQ in CAN message “ PLS request” will not be computed
- Signal ALIVE_PLS_REQ in CAN message “PLS request” will not be computed

6.2.10.2 System setup

- Connect PLS-ECU to actuator and vehicle environment as specified in the document “GKN PLS prototype ECU”
- Supply operation voltage (9V – 16V) to Kl.30
- Supply operation voltage (9V – 16V) to Kl.15
- CAN frames shall be received from PLS-ECU
- CAN frames shall be transmitted from PLS-ECU

- CAN frame “PLS Status”
  -Signal “ALIVE_PLS_ST” will count from 0 to 0x0E continuously
  -Signal “ACTUATOR_STATUS” depends on action see next chapter
- CAN frame “PLS Monitor”
  -Only for debugging

6.2.10.3 Initial Calibration

- Precondition:

- System setup completed

- Sending CAN signal LOCK_UNLOCK_REQ in message “PLS request” with value:

- 3: invalid signal (No action)
  -System will do nothing
  -Output on CAN signal “ACTUATOR_STATUS” in message “PLS Status”: *3: Pos Unknown*

- 0: Unlock System
  -1.) PLS will calibrate to the “Unlock End-stop”
  -PLS will drive slow to the unlock end-stop
  -Output on CAN signal “Actuator_STATUS” in message “PLS Status”: *3: Pos Unknown*
  -2.) After successful calibration:
  -Output on CAN signal “ACTUATOR_STATUS” in message “PLS Status”: *1: Unlock Pos Reached*
  -PLS will drive to the SW-Unlock position (some Ticks to unlock)

- 1: Lock System
  -1.) PLS will calibrate to the “Lock End-stop”
  -PLS will drive slow to the lock end-stop
  -Output on CAN signal “ACTUATOR_STATUS” in message “PLS Status”: *3: Pos Unknown*
  -2.) After successful calibration:
  -Output on CAN signal “ACTUATOR_STATUS” in message “PLS Status”: *2: Lock Pos Reached*
  -PLS will dirve to the SW-Unlock position (some Ticks to unlock)

6.2.10.4 Full-calibration

First change of request after Start up sequence

- Change from Unlock to Lock

- 1.) sending CAN signal LOCK_UNLOCK_REQ in message “PLS request” with value “1: Lock System”
- 2.) PLS will be drive fast to SW-Lock position (some Ticks before physical end-stop)
  -Output on CAN signal if PLS is in defined unlock: ”ACTUATOR_STATUS” in message “PLS Status”:
  1: Unlock Pos Reached
  -Output on CAN signal if PLS is neither in defined unlock or lock position: “ACTUATOR_STATUS” in message “PLS Status”: *0: Running*
  -Output on CAN signal if PLS is defined lock position: “ACTUATOR_STATUS” in message “PLS Status”:
  2:Lock Pos Reached
- 3.)PLS will be drive slow to Lock-End-stop for finishing the calibration
  -Output on CAN signal if PLS is in defined unlock: “ACTUATOR_STATUS” in message “PLS Status”:
  1: Lock Pos Reached
- 4.)PLS will be drive fast to SW-Lock position (some ticks before physical end-stop)
  -Output on CAN signal if PLS is in defined unlock: “ACTUATOR_STATUS” in message “PLS Status”:
  1: Lock Pos Reached

- Change from Lock to Unlock

- 1.) sending CAN signal LOCK_UNLOCK_REQ in message “PLS request” with value “1: Unlock System”
- 2.) PLS will be drive fast to SW-Unlock position (some ticks before physical end-stop)
  -Output on CAN signal if PLS is in defined unlock: “ACTUATOR_STATUS” in message “PLS Status”:
  2: Lock Pos Reached
  -Output on CAN signal if PLS is neither in defined unlock or lock position: “ACTUATOR_STATUS” in message “PLS Status”: *0: Running*
  -Output on CAN signal if PLS is defined lock position: “ACTUATOR_STATUS” in message “PLS Status”:
  1: Unlock Pos Reached
- 3.)PLS will be drive slow to Unlock-End-stop for finishing the calibration
  -Output on CAN signal if PLS is in defined unlock: “ACTUATOR_STATUS” in message “PLS Status”:
  1: Unlock Pos Reached
- 4.)PLS will be drive fast to SW-Unlock position (some Ticks before physical end-stop)
  -Output on CAN signal if PLS is in defined unlock: “ACTUATOR_STATUS” in message “PLS Status:
  1: Unlock Pos Reached

6.2.10.5 Change of request after full-calibration

- Change from Unlock to Lock

- 1.) sending CAN signal LOCK_UNLOCK_REQ in message “PLS request” with value “1: Lock System”
- 2.) PLS will be drive fast to SW-Lock position (some Ticks before physical end-stop)
  -Output on CAN signal if PLS is in defined unlock: “ACTUATOR_STATUS” in message “PLS Status”:
  1: Unlock Pos Reached
  -Output on CAN signal if PLS is neither in defined unlock of lock position: “ACTUATOR_STATUS” in message “PLS Status”: *0: Running*
  -Output on CAN signal if PLS is defined lock position: “ACTUATOR_STATUS” in message “PLS Status”:
  2: Lock Pos Reached

- Change from Lock to Unlock

- 1.) sending CAN signal LOCK_UNLOCK_REQ in message “PLS request” with value “1: Unlock System”
- 2.) PLS will be drive fast to SW-Unlock position (some Ticks before physical end-stop)
  -Output on CAN signal if PLS is in defined unlock: “ACTUATOR_STATUS” in message “PLS Status”: *2: Lock Pos Reached*
  -Output on CAN signal if PLS is neither in defined unlock of lock position: “ACTUATOR_STATUS” in message “PLS Status”: *0: Running*
  -Output on CAN signal if PLS is defined lock position: “ACTUATOR_STATUS” in message “PLS Status”: *1: Unlock Pos Reached*

6.2.10.6 Failure state

- Failure behavior

- Sending CAN signal LOCK_UNLOCK_REQ in message “PLS request” with value “4: Pos Failure”
- PLS will stop moving
- PLS will ignore further requests
- PLS needs to be reset by switching Off – On Kl.30

6.2.11 Park lock actuator connector

To connect the GKN PLS Prototype ECU System with the park lock actuator, you will need the following connector:

NAME	PIECES	MANUFACTURER	PROD. NO.	ILLUSTRATION
Connector for Park lock actuator: Automotive Connectors 6W FEMALE HSNG BROWN 1.5MM TERM	1	Delphi	Delphi Product Number: 211pc062s1149	
Connector Pins: Automotive Connectors SICMA3+ 1.5 FEM (1-2MM2) AU	6	Delphi	Delphi Product Number: 211cc2s2460p	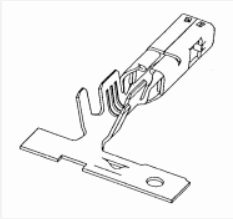

6.2.12 PLS Actuator Pinout

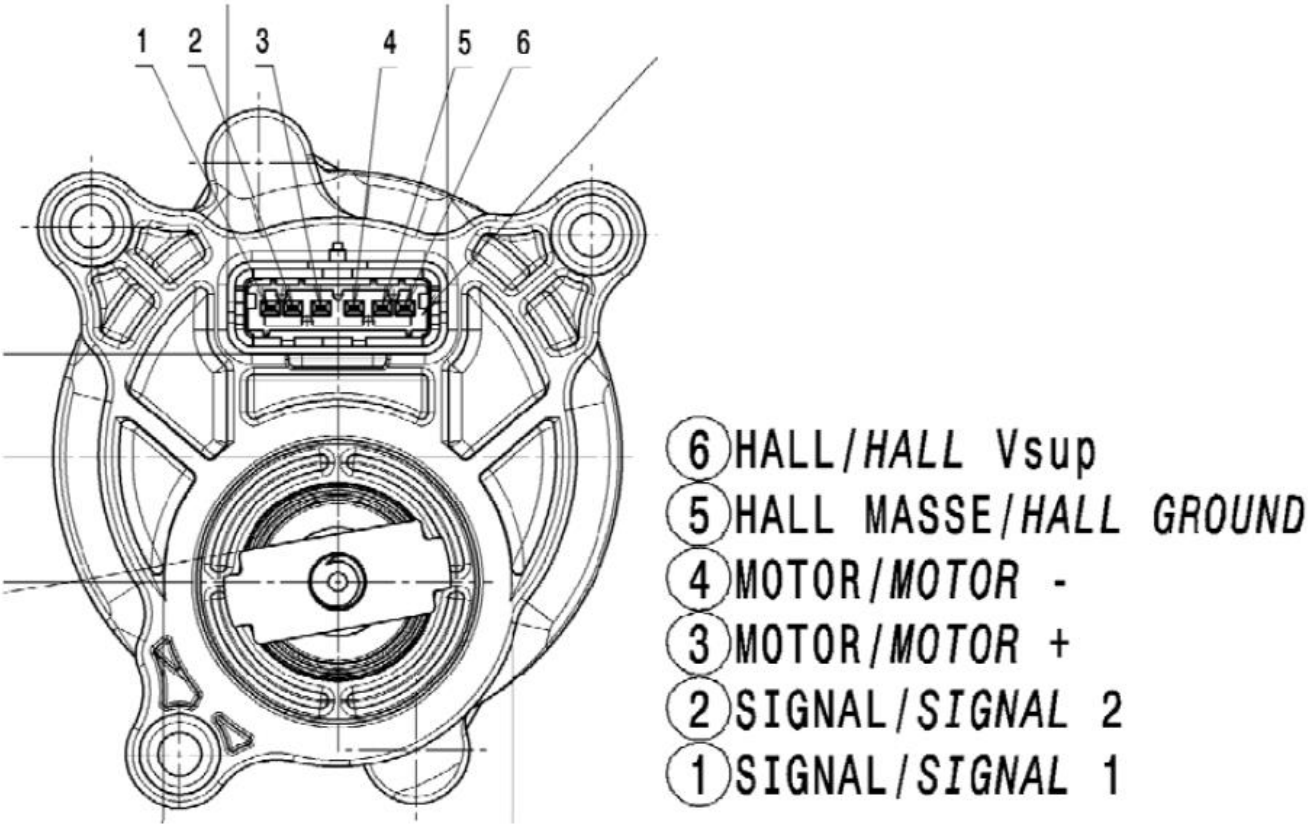

6.3 Warnings on the motor

Warning signs are attached to the motor to warn the operator of possible dangers. Should one of these warning signs fail or become illegible due to wear and tear, it must be immediately renewed! To get an original label, please contact BRUSA support at the manufacturer address given in chapt. *4.6*!

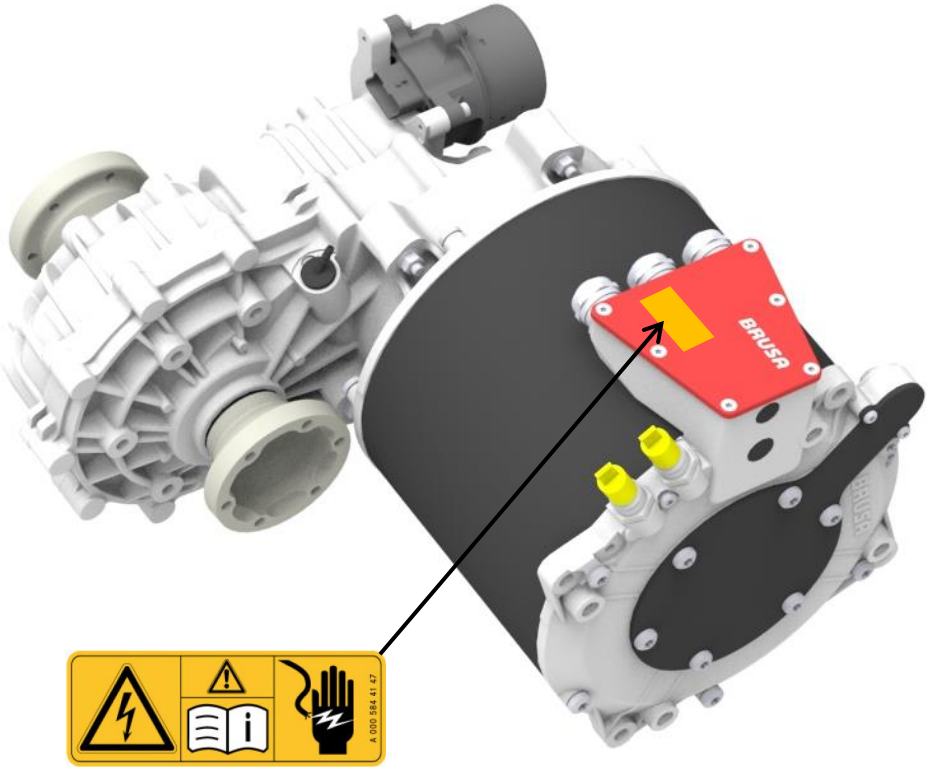

6.4 Basic principle for vehicle installation

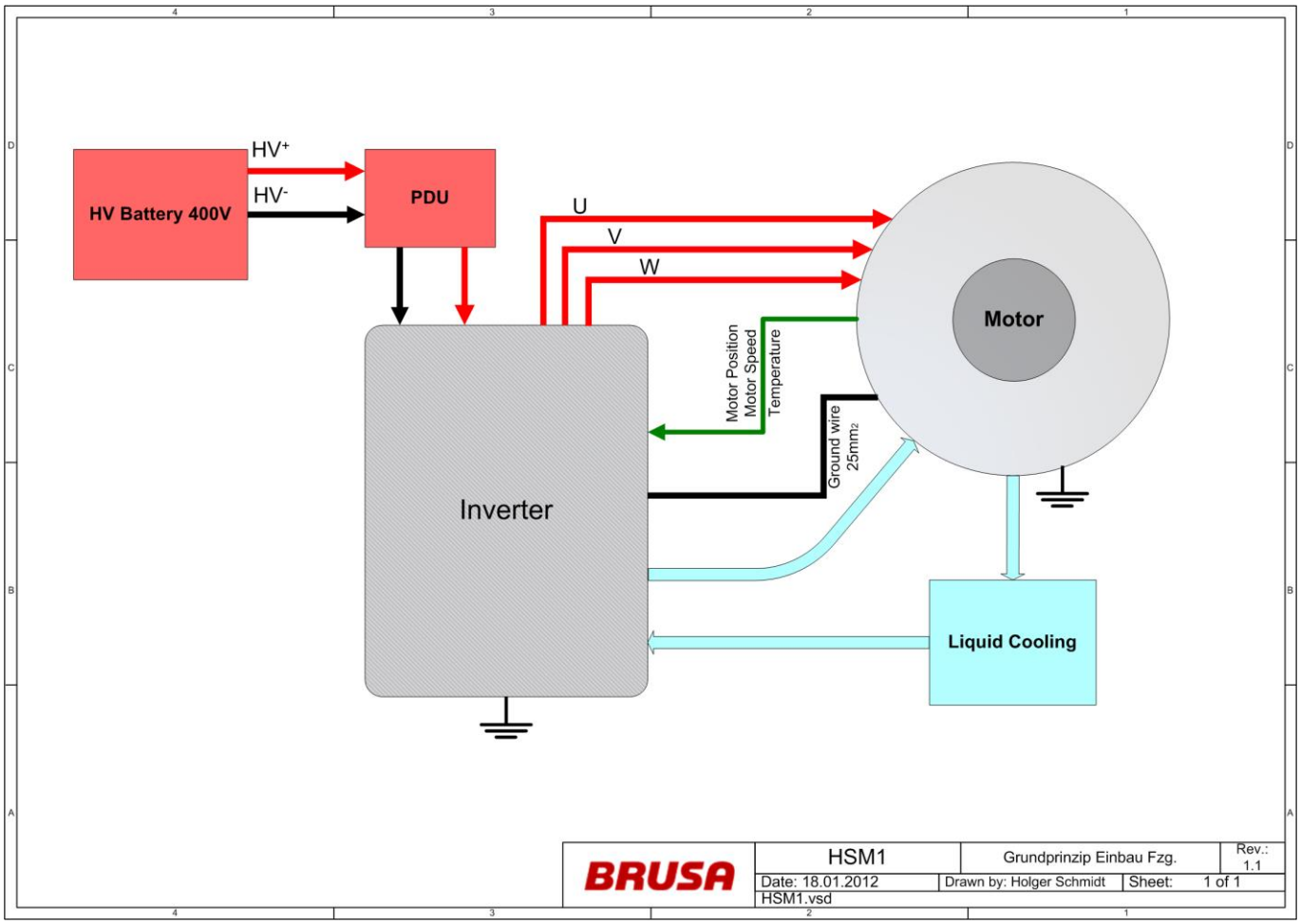

6.5 Safety measures for vehicle installation

INFORMATION

This safety measure is a recommendation by the company BRUSA Elektronik AG and is understood as a basic requirement for the safe operation of electric vehicles!

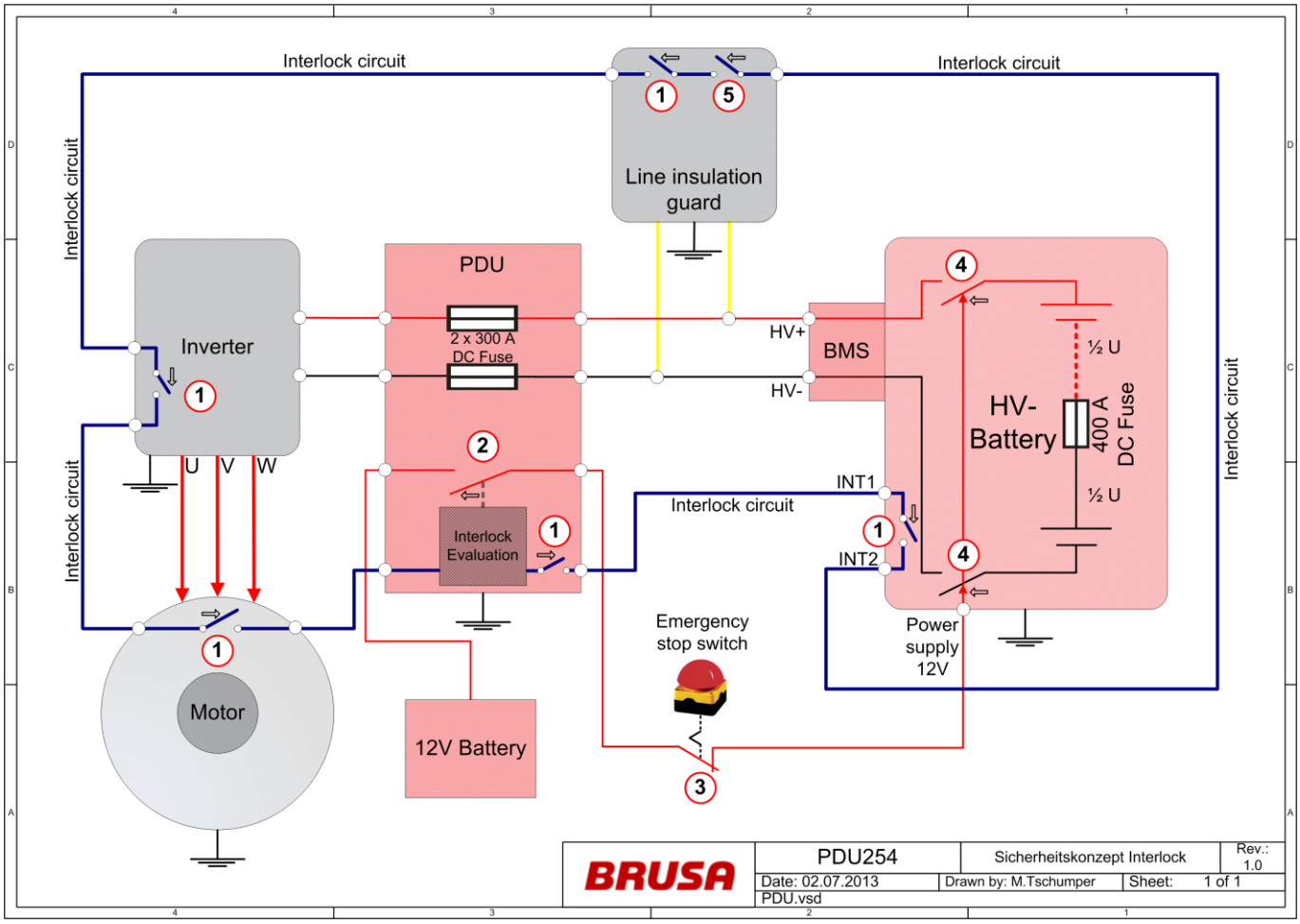

6.5.1 Principle of operation Interlock

The interlock switch (1) is closed if the corresponding interlock condition of each device is met (closed service cover, plugged HV connections ...). The interlock evaluation of the PDU switches the 12V supply voltage (2) of the HV contactors (4) in the battery if the interlock circuit is closed. The emergency stop switch (3) also interrupts the 12V supply voltage of the HV contactors (4). The second interlock (5) of the line insulation guard interrupts the interlock circuit, if a fault in the HV- insulation is detected.

INSTRUCTION

The interlock function is currently not implemented in BRUSA motors. Therefore the interlock function of the motors has to be guaranteed by the vehicle manufacturer.

6.6 Overview of the main structural components

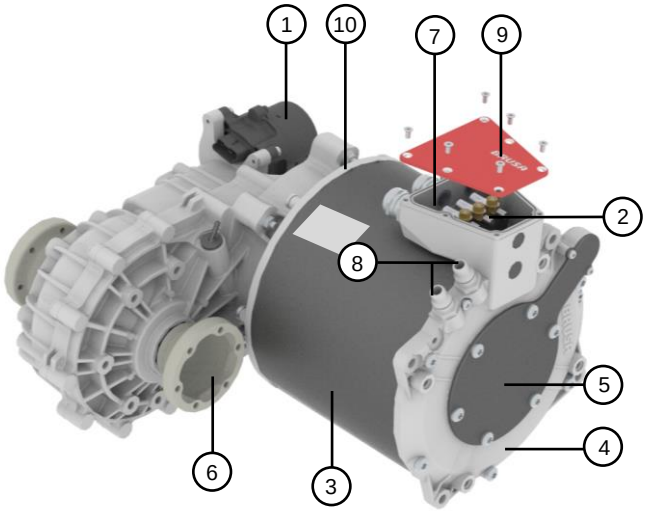

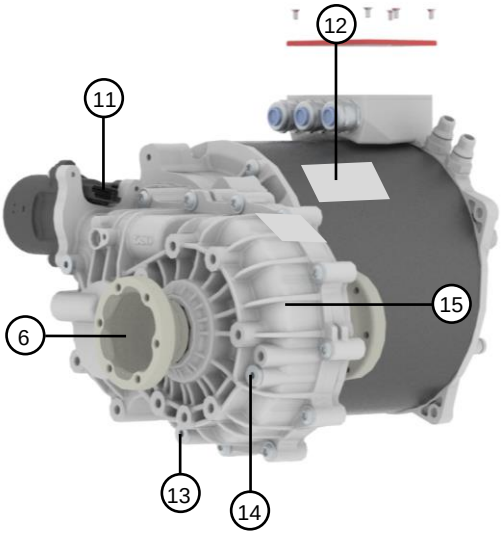

1.	Parking Lock	**2.**	Terminal Board
3.	Cooling Jacket	**4.**	Posterior End-Shield
5.	End-Shield Cover	**6.**	Drive Shaft Flange
7.	Connection Box Phases U, V, W (R, S, T)	**8.**	Cooling Water Connections
9.	Connection Box Cover	**10.**	Anterior End-Shield / Gear Box Housing
11.	Parking Lock Sensor	**12.**	Type Plate
13.	Oil Drain Plug	**14.**	Oil Fill Plug
15.	GSO1 Gear Box		

6.7 Dimensions and installation information

6.7.1 Rotor offset

The rotor offset is determined during assembly and is noted on a sticker on the motor housing (usually near the type plate). Parameters for the rotor offset must be set during the start-up of the inverter. You can find further information on the process in the technical information for the inverter.

If the sticker on the housing is illegible or missing, please contact BRUSA support, stating the serial number, at the manufacturer address given in chapt. *4.6*..

6.7.2 Fixing points

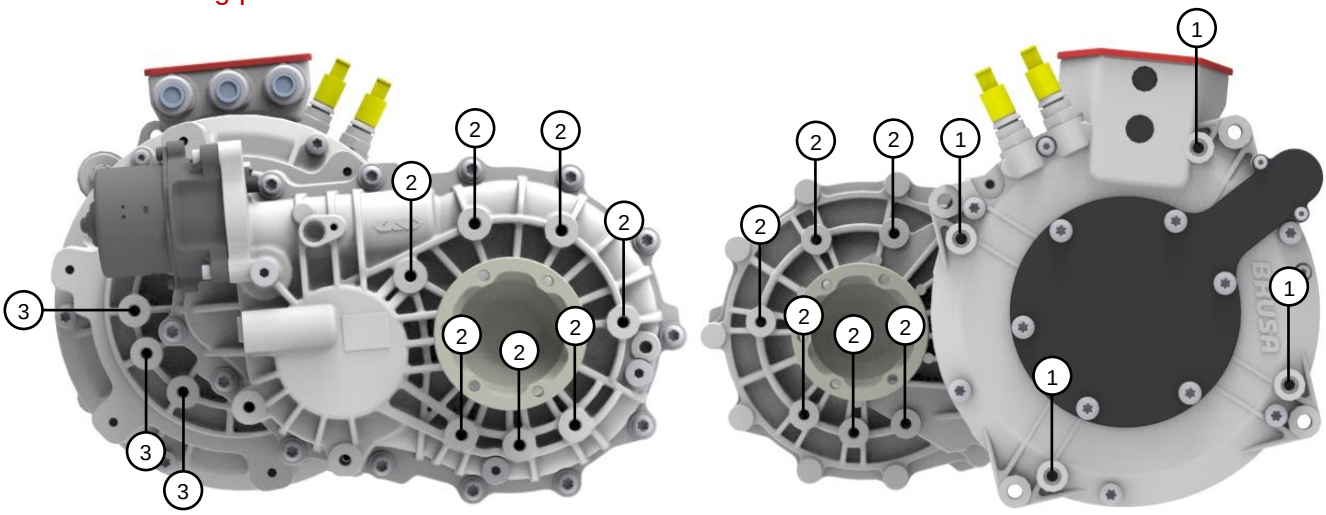

1.	Fixing points Posterior End-Shield	2.	Fixing points offset
3.	Fixing points Anterior End-Shield		

INFORMATION
Assembly instructions for the fixing points: All fixing points are provided with an M10 thread

6.7.3 Dimensions

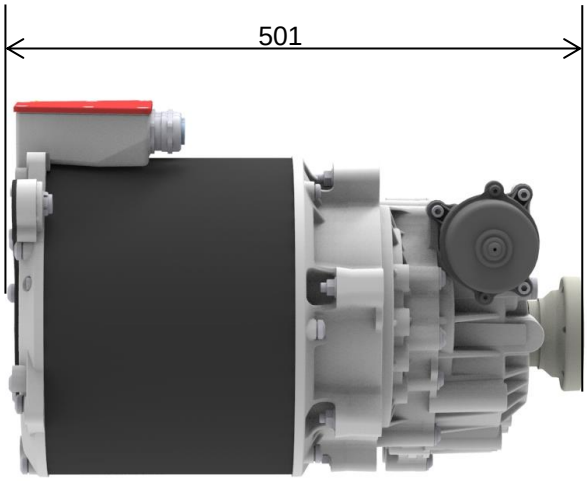

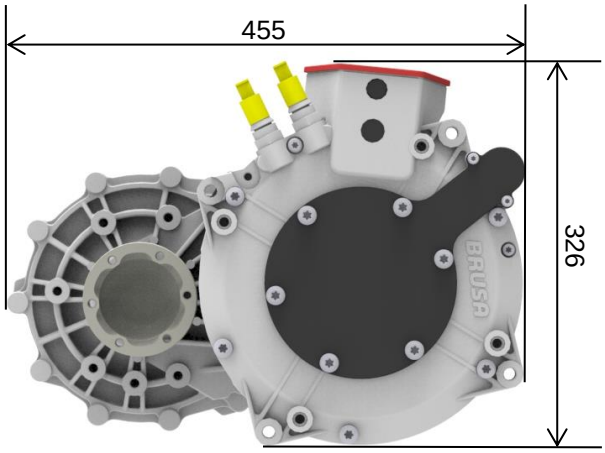

6.7.4 Installation position

INFORMATION
In any event the motor must be installed in such a way that the oil drain plug points downwards.

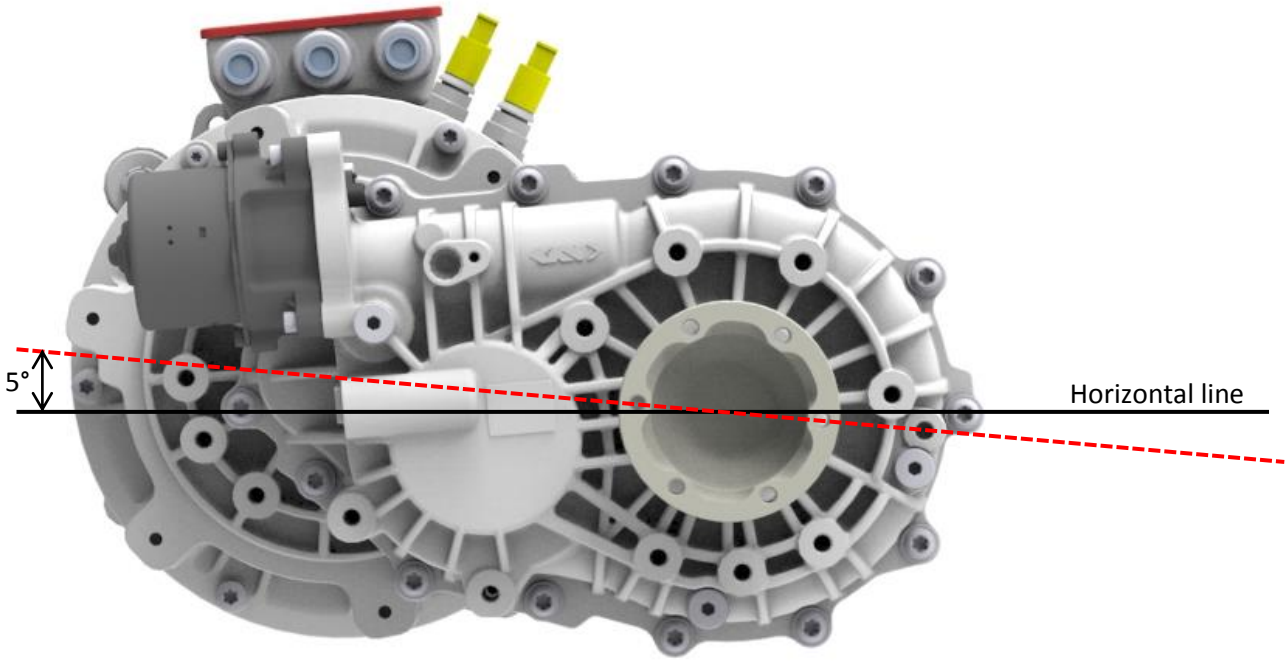

6.7.5 Drive direction

INFORMATION
The gearbox is attached on the left (left of the driving direction) of the motor

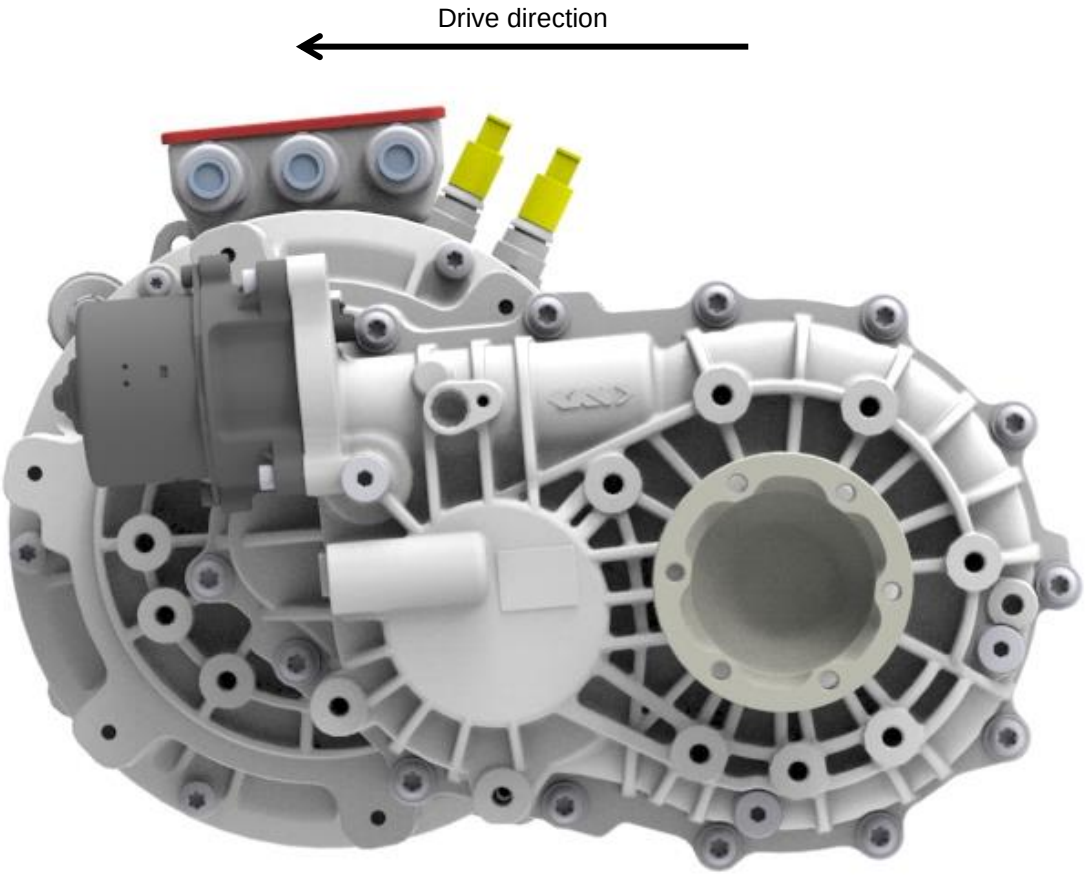

6.7.6 Customer Drawing

INFORMATION
On our FTP-Server, you can find a Customer Drawing of the Drive Train as well as the CAD-Stepfiles: http://www.brusa.biz/_files/drive/10_indexContent/StartHere_Motor&Drivetrain_S&M.html

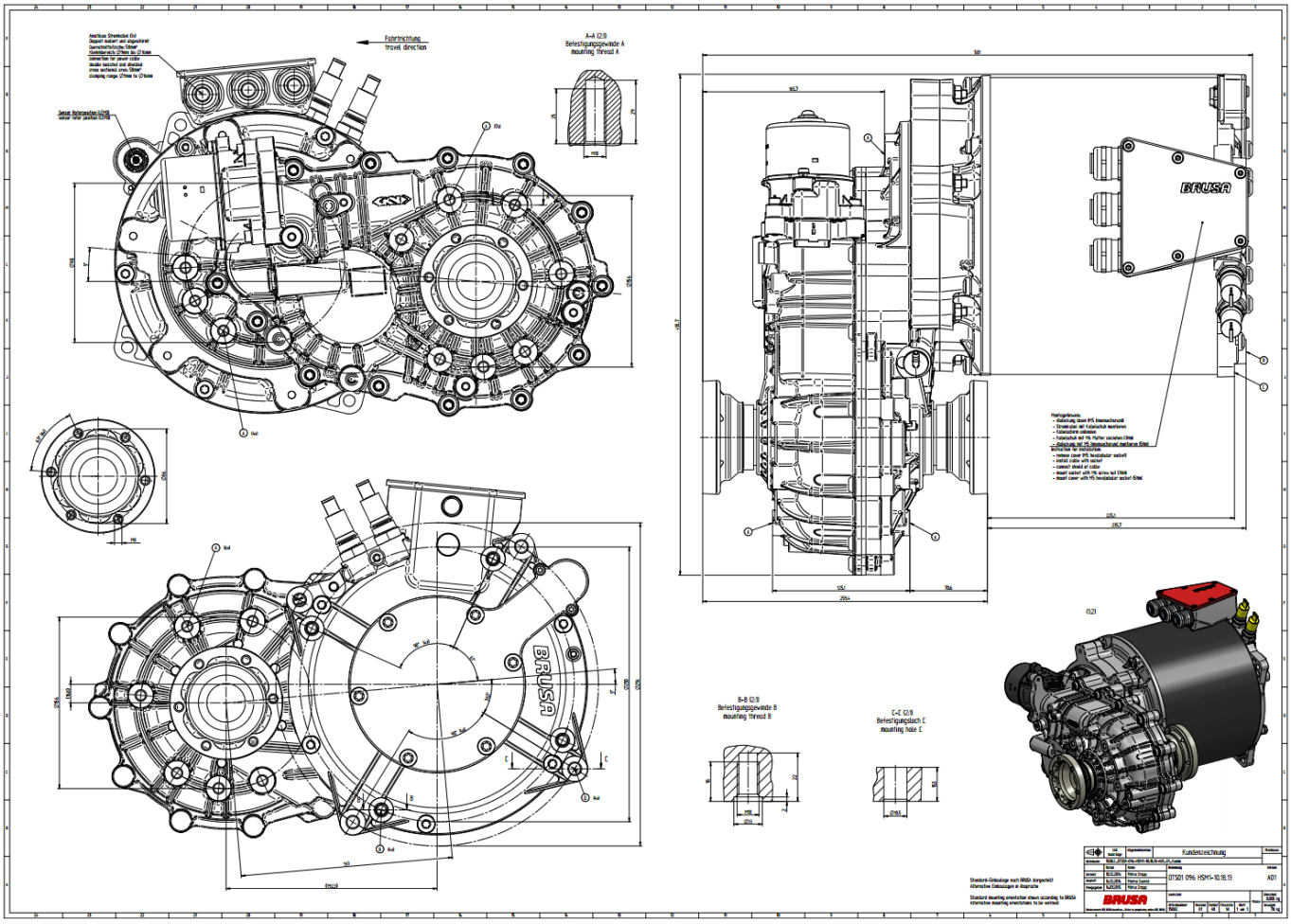

6.7.7 Filling up and checking of gear oil

INFORMATION
The gearbox is already filled up with the right amount of gear oil. To change the gear oil, perform the steps below.

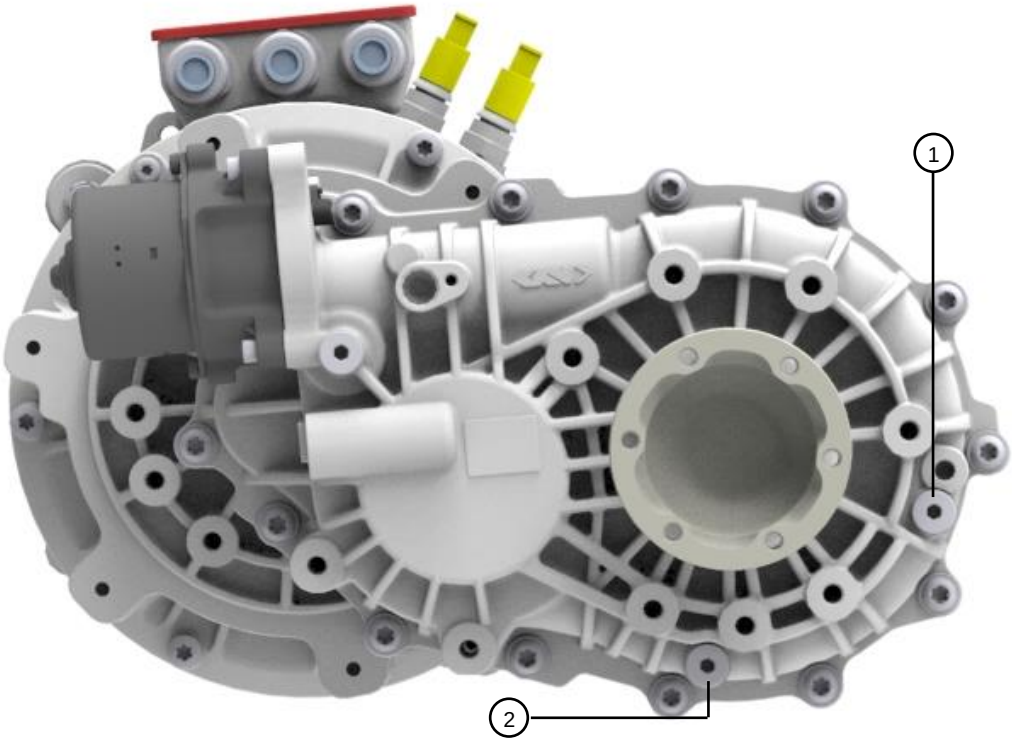

1. Oil Fill Plug	**2.** Oil Drain Plug

PROCEDURE STEP	ILLUSTRATION / OTHER INFORMATION
1. Open the oil fill plug (1).	---
2. Open the oil drain plug (2).	---
3. Drain all the oil out of the gearbox	---
4. Close the oil drain plug (2).	Screw torque: 43 +/-4 Nm
5. Pour around 750ml (±50ml) of gear oil in.	For information on the oil specification see chapt. *6.1 Technical data*
6. Close the oil fill plug (1)	Screw torque: 43 +/-4 Nm

6.7.8 Ventilating the gearbox

The gearbox includes a breather for ventilation. The breather provides an interface for a ventilation hose (not included). Since the breather has no back-pressure valve, a hose is required. Routing of the hose has to be determined by the OEM for the specific application. Water ingress and contamination of the gearbox is to be avoided.

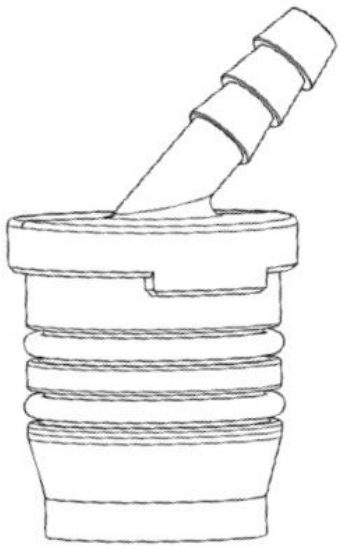

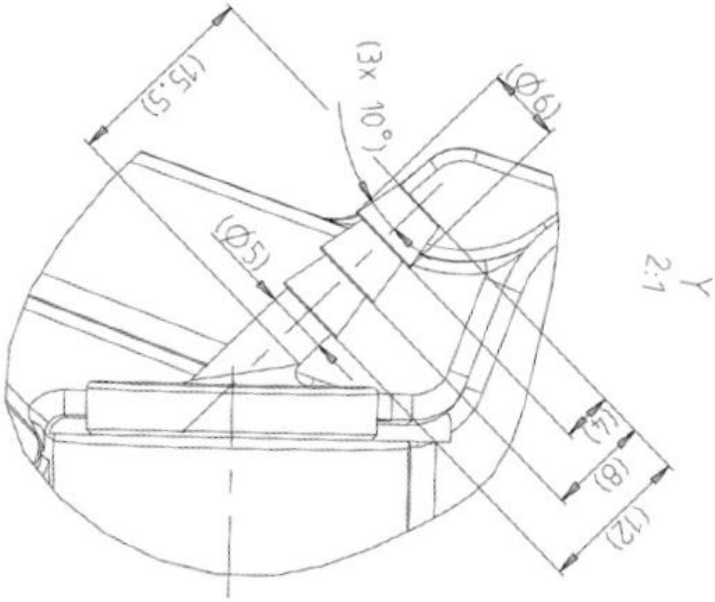

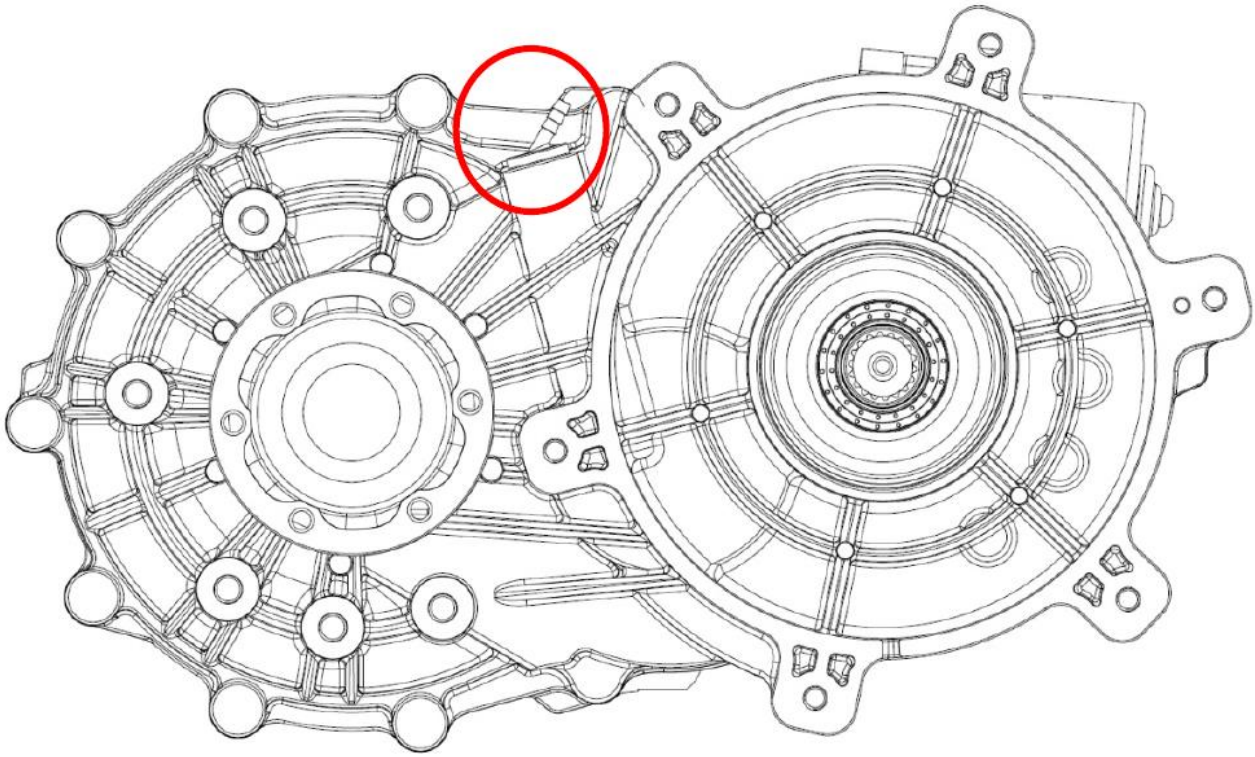

Location of the Breather

6.8 Regulation and control system

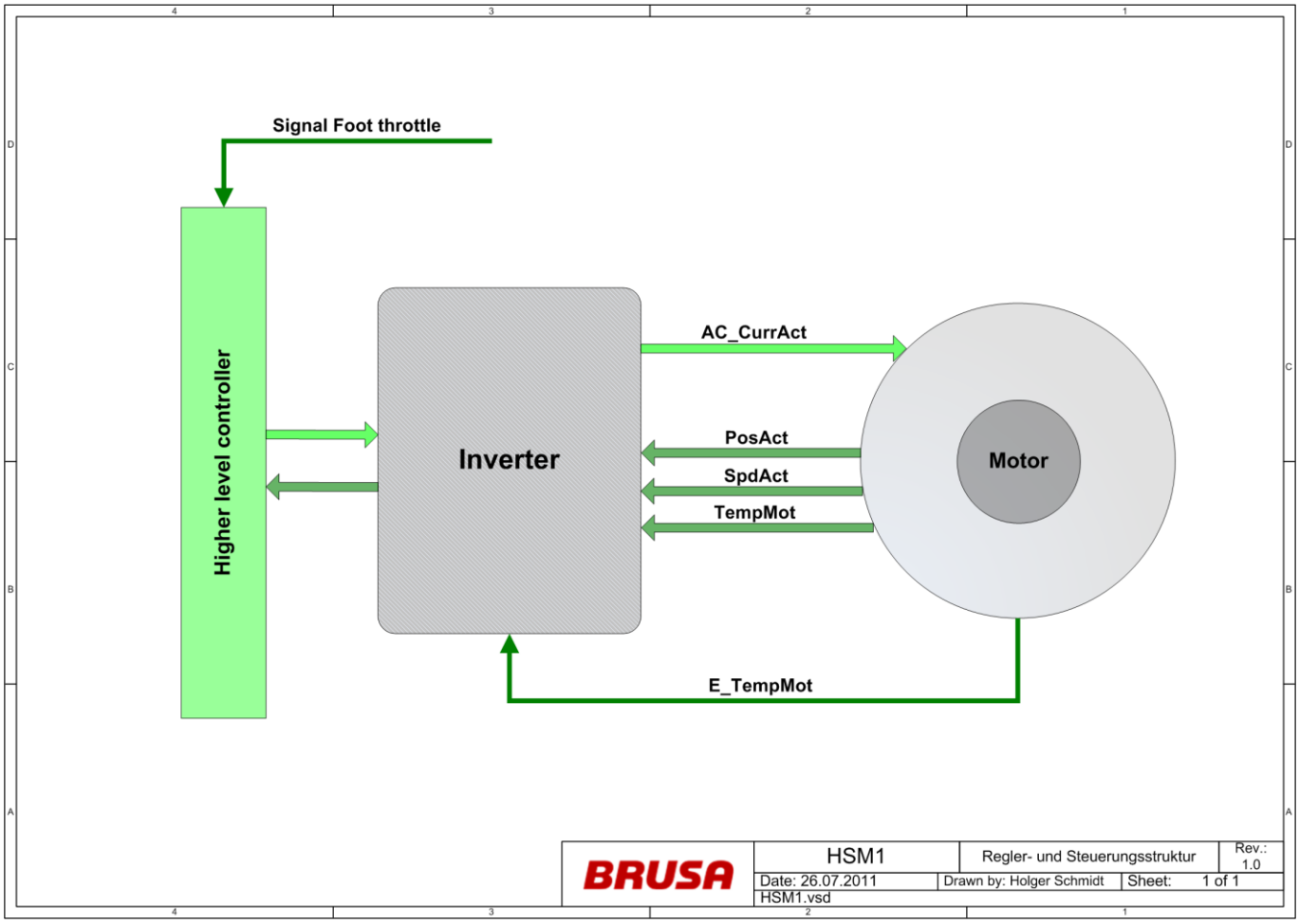

AC_CurrAct	Phase current generated by inverter (U, V, W)	**TempMot**	Current motor temperature
PosAct	Current motor position	**E_TempMot**	Excessive temperature (phase current cut-off)
SpdAct	Current speed		

6.9 Stator and temperature measurement

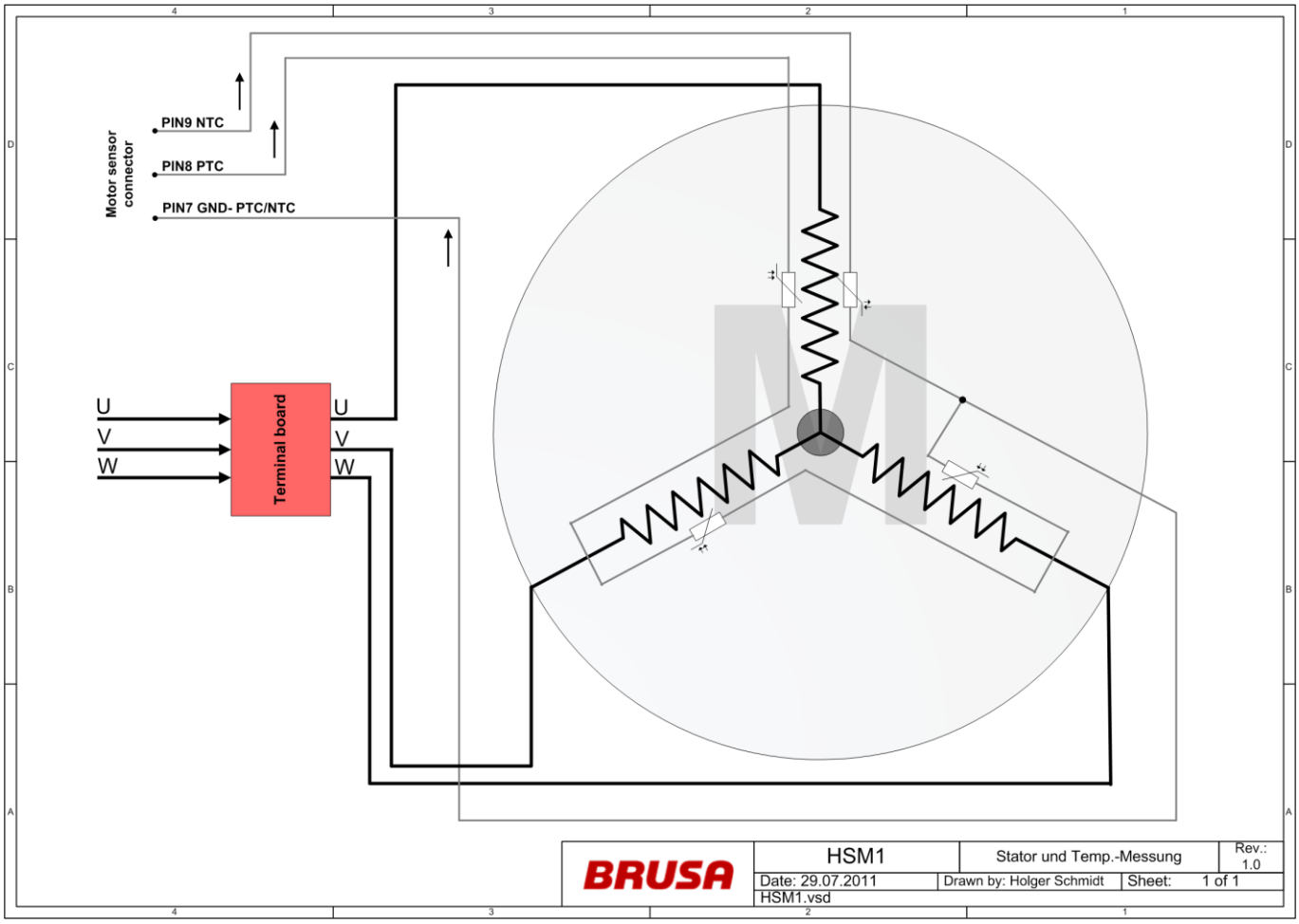

6.10 Mechanical connections

6.10.1 Cooling system

INSTRUCTION
Observe the cooling liquid mixture ratio (water / glycol) which is adapted to the outside temperature! You can find information on the mixture ratio in the manufacturer's technical data.

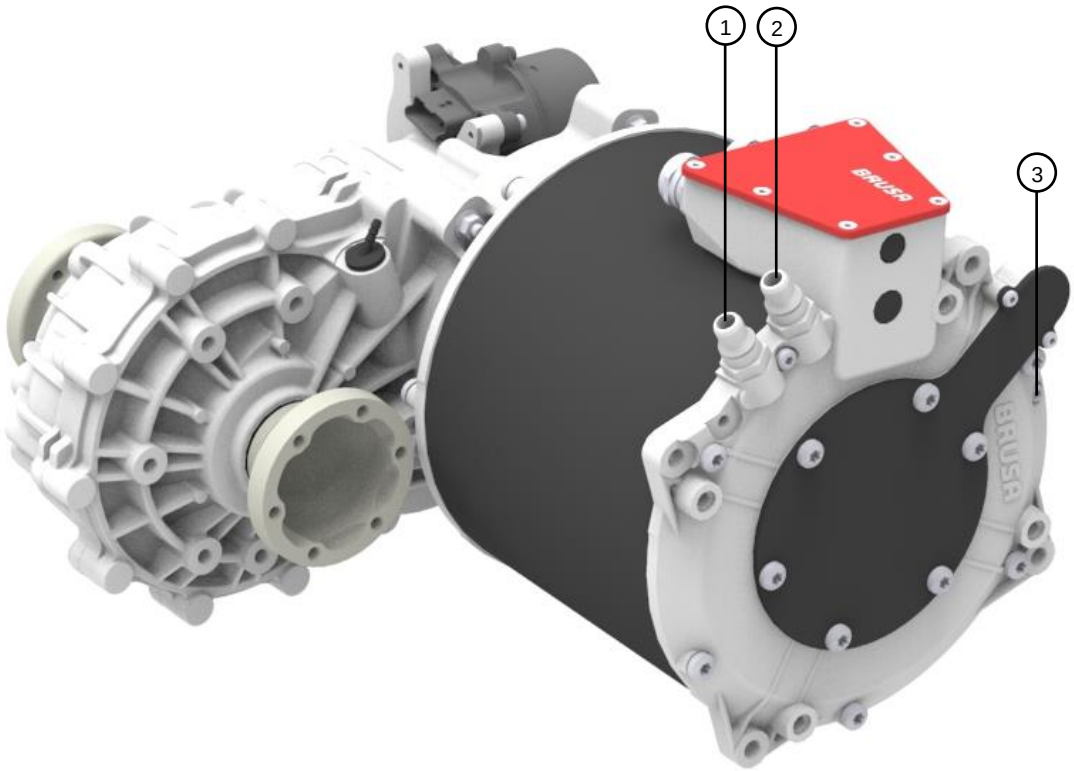

1.	Cooling water outlet connection	**2.**	Cooling water inlet connection
3.	Cooling system ventilation screw		

6.10.2 Cooling water connections

Quick connector for cooling Water connection pieces 90° Norma PS3 (MHAA776)	Quick connector for cooling Water connection pieces 0° Norma PS3 (MHAA775)	Quick connector for cooling Water connection pieces M18 x 1.5 (MAAA366)
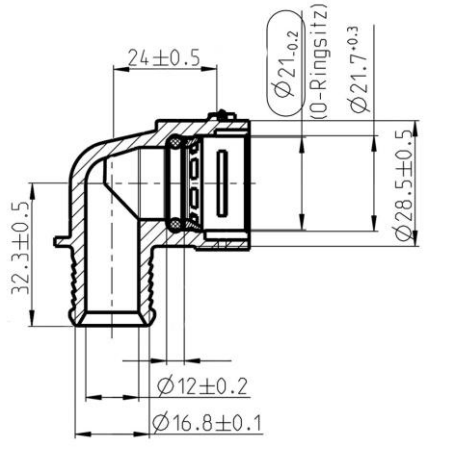	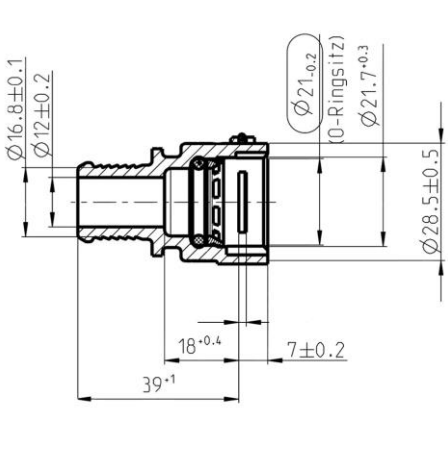	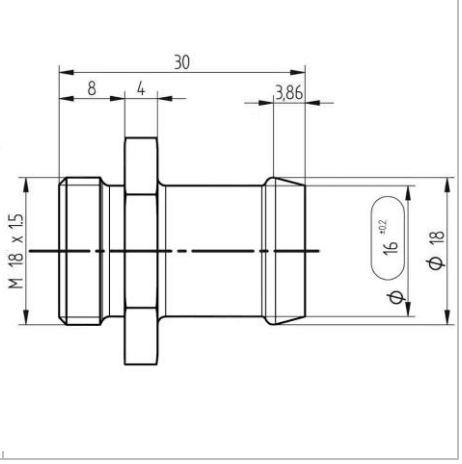

6.11 Connections electrical

You will find the required cable types and diameters in chapt. *6.1 Technical data*

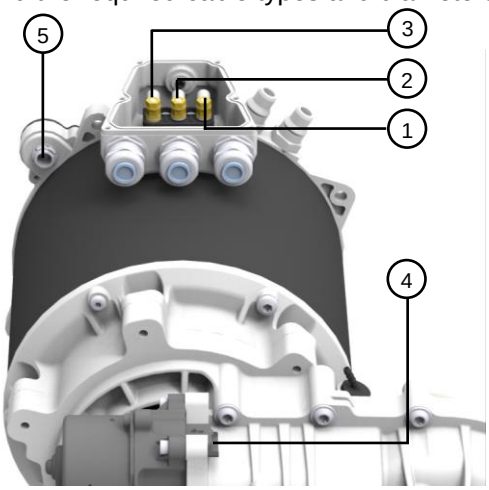

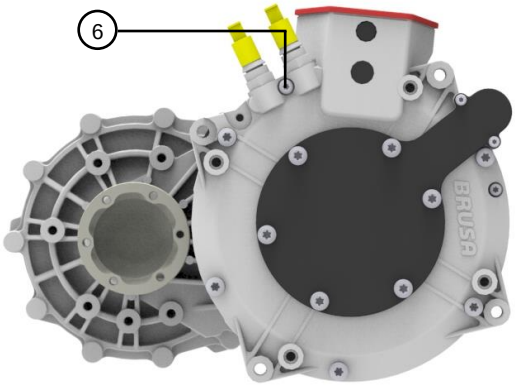

1.	Phase U	**2.**	Phase V
3.	Phase W	**4.**	Parking lock sensor connection
5.	Motor sensor connection	**6.**	Ground (GND)

6.11.1 Grounding Screw

WARNING

Sparking!
Fire hazard!
A loose ground circuit can lead to sparking and subsequent fires!
Ensure that the earth connection is connected correctly!

INFORMATION

The grounding screw (1) must be connected with the earth of the vehicle and/or testing bay. The cable diameter of the earth cable must correspond to the dimensions of the HV wiring.
For EMC reasons we generally recommend an additional ground connection (25 mm^2) to the inverter!
Torque earthing screw (1) M8 x 10 = 15 Nm

6.11.2 PIN assignment of motor sensor connection

INFORMATION

The pin assignment of the motor sensor connection is BRUSA specific and deviates from the standard pin assignment of the cable manufacturer!

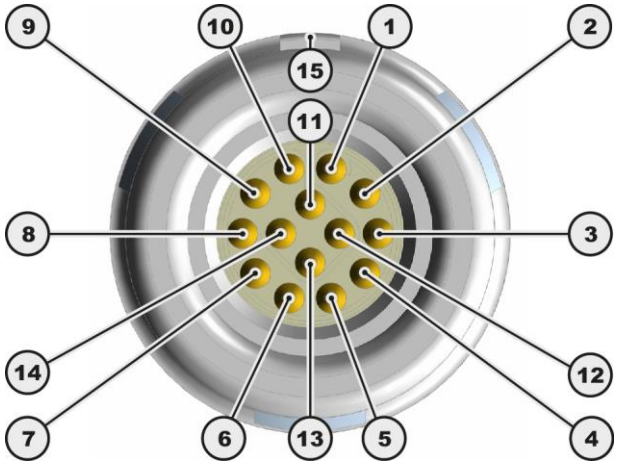

1.	**POS3**	6 bit absolute position bit 3	**2.**	**POS4**	6 bit absolute position bit 4
3.	**POS5**	6 bit absolute position bit 6	**4.**	**GND-NTC**	Earth NTC / PTC
5.	**NTC**	Motor temperature sensor	**6.**	**PTC**	Motor overheat switch-off
7.	**VCC-GEB**	Motor sensor – supply voltage 6 V_{DC}	**8.**	**POS0**	6 bit absolute position bit 0
9.	**POS1**	6 bit absolute position bit 1	**10.**	**POS2**	6 bit absolute position bit 2
11.	**GND**	Earth	**12.**	**MOTB**	Motor B (incremental)
13.	**MOTA**	Motor A (incremental)	**14.**	**UPD**	Position update data
15.	**---**	Centering groove			

6.12 Motor type plate

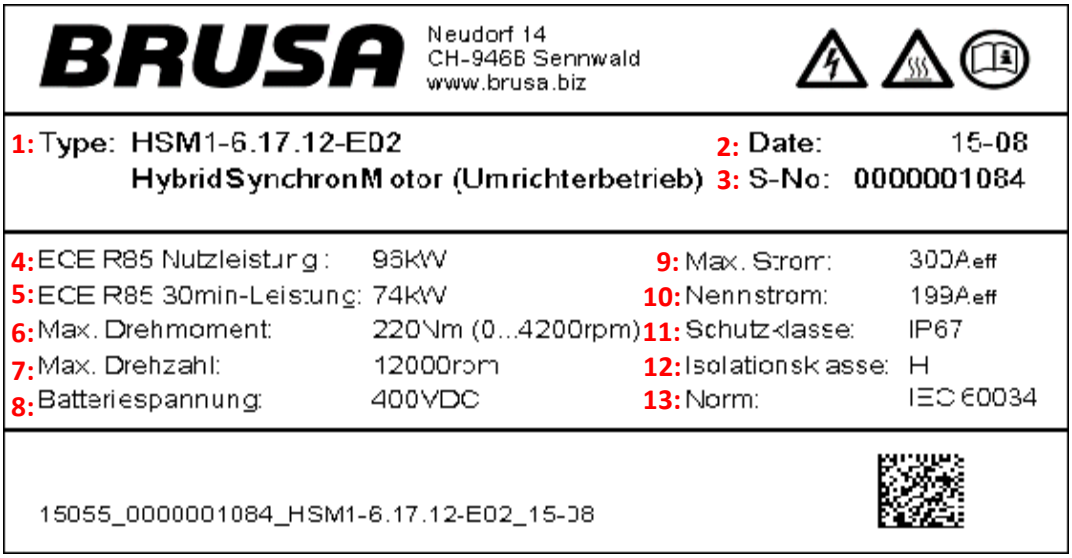
BRUSA
Neudorf 14
CH-9466 Sennwald
www.brusa.biz

1: Type: HSM1-6.17.12-E02
HybridSynchronMotor (Umrichterbetrieb)
2: Date: 15-08
3: S-No: 0000001084

4: ECE R85 Nutzleistung:	96kW	9: Max. Strom:	300Aeff
5: ECE R85 30min-Leistung:	74kW	10: Nennstrom:	199Aeff
6: Max. Drehmoment:	220Nm (0...4200rpm)	11: Schutzklasse:	IP67
7: Max. Drehzahl:	12000rpm	12: Isolationsklasse:	H
8: Batteriespannung:	400VDC	13: Norm:	IEC 60034

15055_0000001084_HSM1-6.17.12-E02_15-08

1.	Motor Type	**2.**	Date of production
3.	Serial number	**4.**	Net power
5.	Power for 30min	**6.**	Maximum torque
7.	Maximum speed	**8.**	Battery voltage
9.	Maximum current	**10.**	Rated current
11.	Protection class	**12.**	Isolation class
13.	Standard		

7 Profiles and diagrams

INFORMATION

For more information about the motor itself, please visit our FTP-Server.

There you can find all the datasheets and motor manuals, which includes all the efficiency diagrams, information about thermal behaviour and more.

Link to FTP-Server:
http://www.brusa.biz/_files/drive/10_indexContent/StartHere_Motor&Drivetrain_S&M.html

BRUSA Motor & Drivetrain Documentation

Product Information

Motors	Meaning		Drivetrains with gearboxes	Meaning
ASM	Asynchronous motor		DTDP1	Double Planetary Traction Drive
HSM	Hybrid synchronous motor		DTSX1	Single Transaxle Drivetrain
IPM	Internal permanently excited synchronous motor		DTDO1	Double Offset Traction Drive
			DTSO1	Single Offset Traction Drive

Datasheet

- BRUSA_DB_EN_ASM1.pdf
- BRUSA_DB_EN_HSM1.pdf
- BRUSA_DB_EN_HSM1_750V.pdf
- BRUSA_DB_EN_HSM1_10.18.04.pdf

Drivetrain Flyer

- DTDP1
- DTSX1
- DTDO1
- DTSO1
- DTSP1

Manual

- Motor Manual [EN]
- DTSX1 Manual [EN]

HSM CAD Data

- 3D Step Data HSM1-10.18.04-A01
- 3D Step Data HSM1-10.18.04-A02
- 3D Step Data HSM1-10.18.13-D01
- 3D Step Data HSM1-10.18.13-D02

8 Installation / start-up

INSTRUCTION
Damage to the motor! You must ensure that you upload the appropriate motor table for this motor! The wrong data can lead to damage to the motor and to the inverter!

INSTRUCTION
Damage to the cable! During installation and the laying of cables, observe the maximum bending radius given by the manufacturer! Avoid laying the cables alongside sharp edges and mechanical components!

INFORMATION
Visually check the packing material and the motor in particular for damages (e.g. cracks in the motor and gear box housing) before installation. Each motor undergoes a strict quality and function test at BRUSA before distribution. However, we have no control over transportation routes which can sometimes take a long time and the shipping of our products.

PROCEDURE STEP	ILLUSTRATION / OTHER INFORMATION
14. Insert the motor into its position and connect the mechanical coupling components. Please adhere to the installation instructions, see chapt. *6.7.2*	---
15. Check that all connecting elements are secure.	---
16. Unscrew the screws (1). Take the connection box cover (2) with the O-ring (3) off.	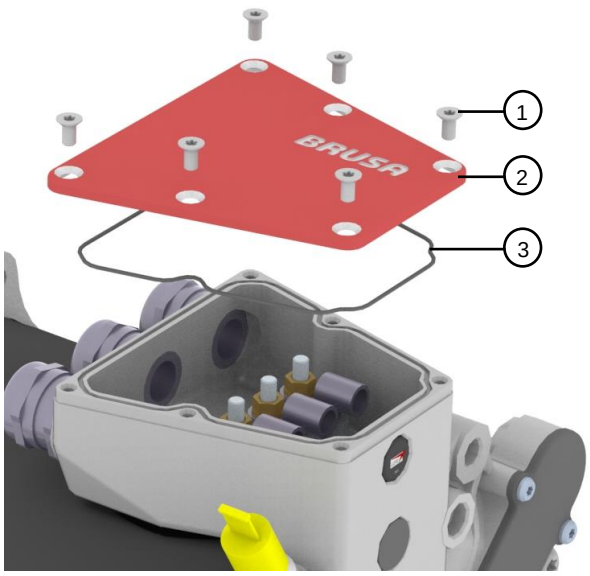

PROCEDURE STEP	ILLUSTRATION / OTHER INFORMATION
17. Unscrew the nuts (1). Remove the washers (2).	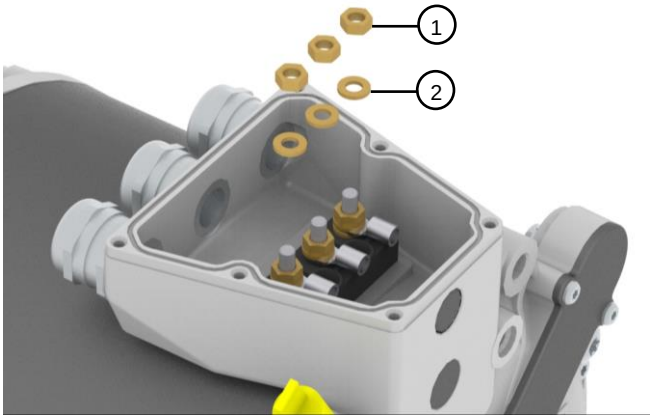
18. Connect the ground wire (1) with the car body and the screw (2). For EMC reasons we generally recommend an additional ground connection (25 mm^2) to the inverter! Torque = 15 Nm	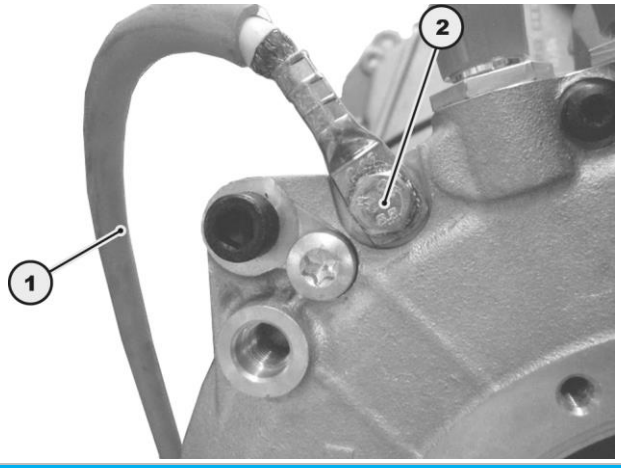
NOTE	
Ensure that you connect the phases correctly! Mixing up the phases will lead to a change in the rotating direction of the motor or to malfunctions in the motor depending on the connection version.	
19. Connect the HV supply. ➢ Phase U (1) ➢ Phase V (2) ➢ Phase W (3) Ensure that the cable fittings are positioned correctly and that they are secure. Torque of screws M6 = 3 Nm Torque of M25 screw-in plug on connection box = 15 Nm See chapt. 8.1 Connecting the HV supply to assemble the HV cables	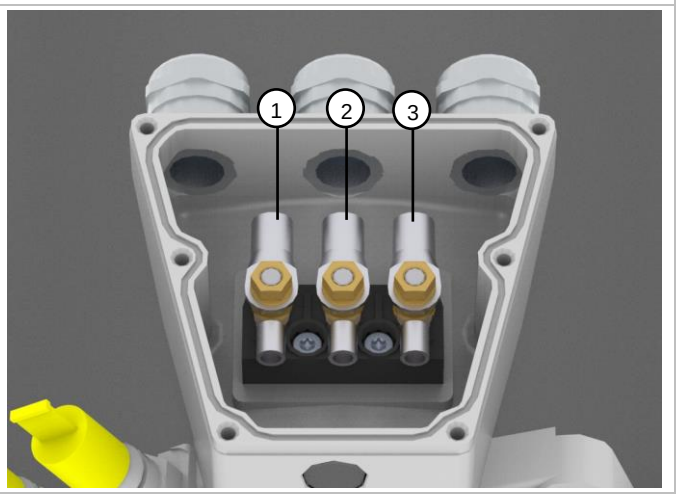

PROCEDURE STEP	ILLUSTRATION / OTHER INFORMATION
20. Put the O ring in the guide slot. Screw down the connection box cover. Torque = 5 Nm	---
21. Connect the motor sensor cable (1) with the motor sensor switch (2).	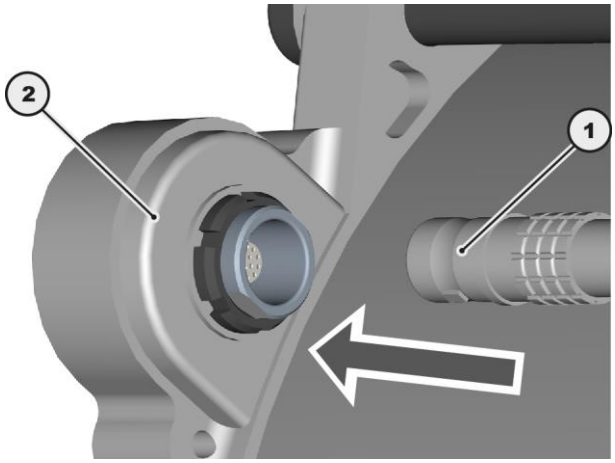
22. Connect the cooling water pumps (1) and (2). Pay attention while doing so to the cooling water inlet (1) and the cooling water outlet (2).	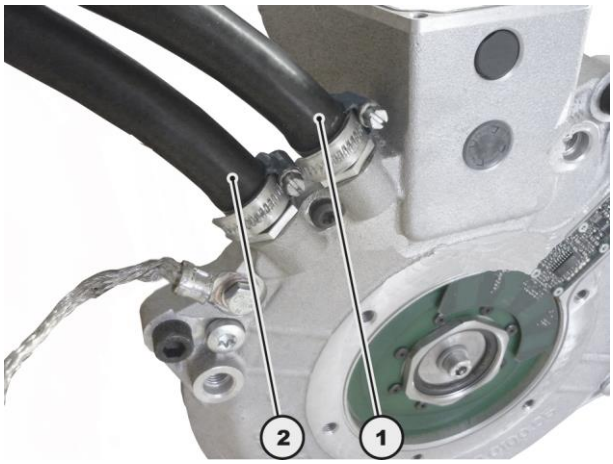
23. Ventilate the cooling system. **See chapt.** ***8.2 Ventilating the cooling system***	---

INFORMATION
The motor is now ready for operation. During the initial start-up, start the motor with care and caution!

8.1 Connecting the HV supply

The building of the HV wiring must be carried out in accordance with the following instructions. Here it is important that no strands are damaged and that none stick out at the sides on the assembled cable. So check that the screw connections are correct for each completed cable and that the cable lug is fixed properly (pull test).

For the HV connections we recommend:

- A shielded, insulated automotive cable (e.g. Huber & Suhner).
- Cable lug, for the type see chapter *12 Spare Parts*
- To assemble the cable lugs, using the appropriate crimping tool is absolutely necessary!

INSTRUCTION
Make absolutely sure that the individual strands of the shielding braid (1) do not jut out over the sealing ring (3) under any circumstances! Once in the integrated state, this will lead to leakages and subsequently to the leaking of water into the housing!

PROCEDURE STEP	ILLUSTRATION / OTHER INFORMATION
24. Insulate 35 mm of the HV cable (1). Ensure that you do not damage the shielding braid underneath it! The lengths of the phase cables in the connection box are different, so this will have to be adjusted accordingly for U V W.	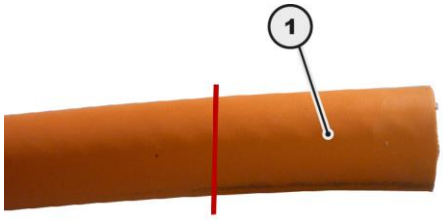
25. Shorten the shielding braid (1) by 20 mm. The cable-side shielding braid (2) must be a length of around 15 mm.	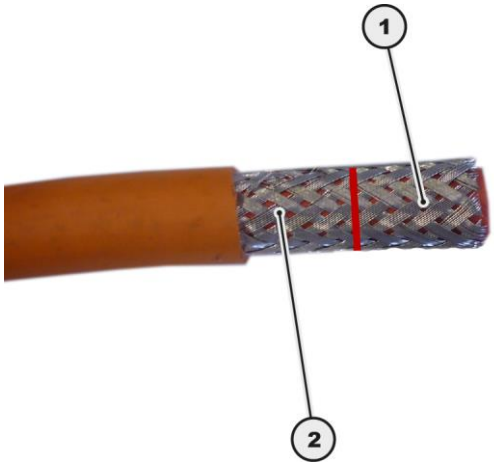

PROCEDURE STEP	ILLUSTRATION / OTHER INFORMATION
26. Lead the HV cable (1) through the union nut (2). Lead the HV cable (1) through the terminal insert (3).	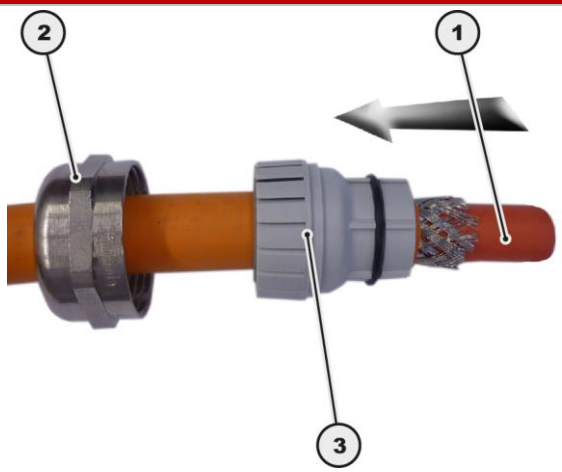
27. Place the terminal insert (1) with the front edge flush with the cable insulation (2).	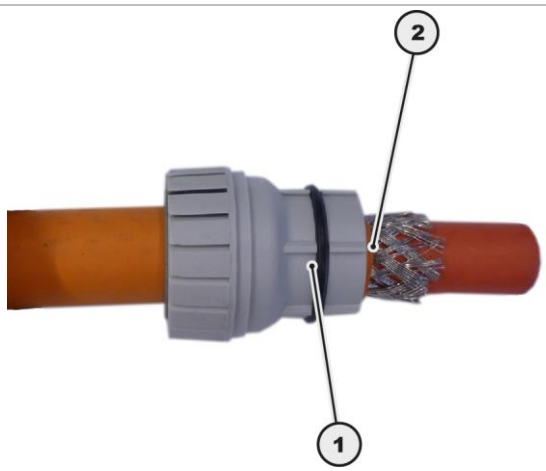
28. Put the shielding braid (1) over the terminal insert (2). During this, the shielding braid (1) may overlap the O-Ring (3) by a maximum of 2 mm. Fix the terminal insert (2) in position on the HV cable, eg with electrical tape (4).	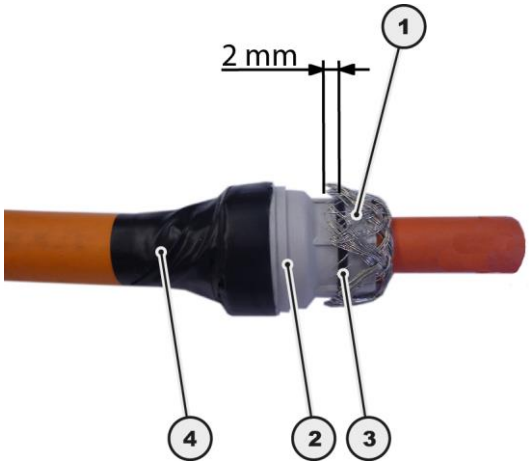

PROCEDURE STEP	ILLUSTRATION / OTHER INFORMATION
29. Insulate 16 mm of the HV cable (1). The lengths of the phase cables in the connection box are different, so this will have to be adjusted accordingly for U V W.	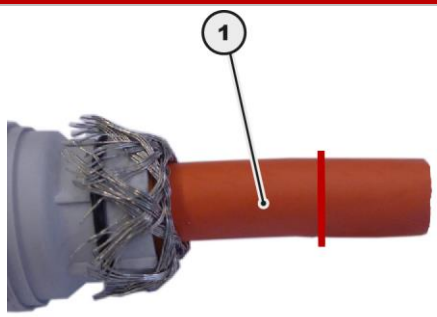
30. Assemble the cable lug (1) at the end of the cable. No strands should stick out at the sides! The crimping must be hexagonal. Ensure that the crimping has no deformations at the sides because this will make later installations in the housing difficult!	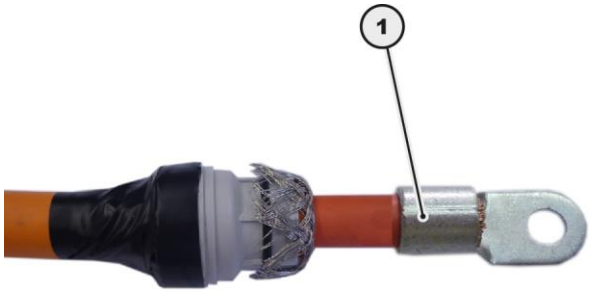
31. Check the secure positioning of the cable lug manually.	---
32. Assemble a shrinkage tube (1) on the cable lug (2). The assembly of a shrinkage tube (1) is absolutely necessary because otherwise contacting can result in the housing!	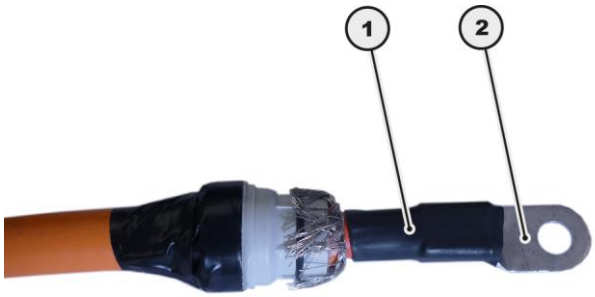

INSTRUCTION

During the layout of the cable take care that the first part of the cable is at least 5cm straight before it will be bend to a radius.

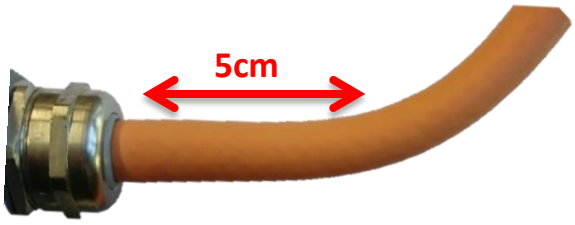

WARNING

If you have to reassembly the cable you have to use a new terminal insert. Otherwise it can cause a leakage.
The terminal inserts can be ordered from BRUSA Elektronik AG or directly from hummel.com.

8.2 Ventilating the cooling system

INSTRUCTION
Air pockets in the cooling passage along with generally insufficient cooling of the motor lead to increased wear! Ensure that the cooling circuit is fault-free.

PROCEDURE STEP	ILLUSTRATION / OTHER INFORMATION
1. Switch on the cooling circuit.	---
2. Place a suitable collection container under the ventilation hole.	---
3. Open the ventilation screw (1).	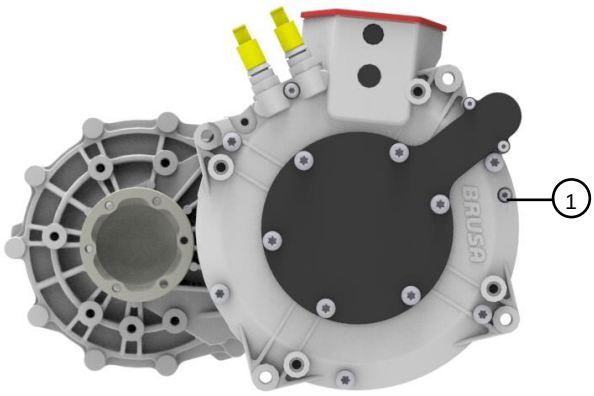
4. Leave the cooling circuit on until no more air bubbles come out of the ventilation hole.	---
5. Tighten the ventilation screw. Torque = 7 Nm	---
6. Check the cooling water level.	---

8.3 Carrying out the HV test

DANGER

High voltage!
Danger to life!
The motor housing can be live with high voltage during the HV test! Under no circumstances should you touch the motor housing!
Only carry out the test in a secure environment (no access by outside persons possible)!

INSTRUCTION

Destruction of the stator windings!
You must adhere to the given test voltage and testing time!
Exceeding this test voltage and testing time can lead to damage to the motor!

INFORMATION

The HV test ensures that there are no ground short circuits present within the windings and from the windings and temperature sensors to the housing.
The HV test must only be carried out after working on the HV supply (e.g. after the changing of the terminal board).

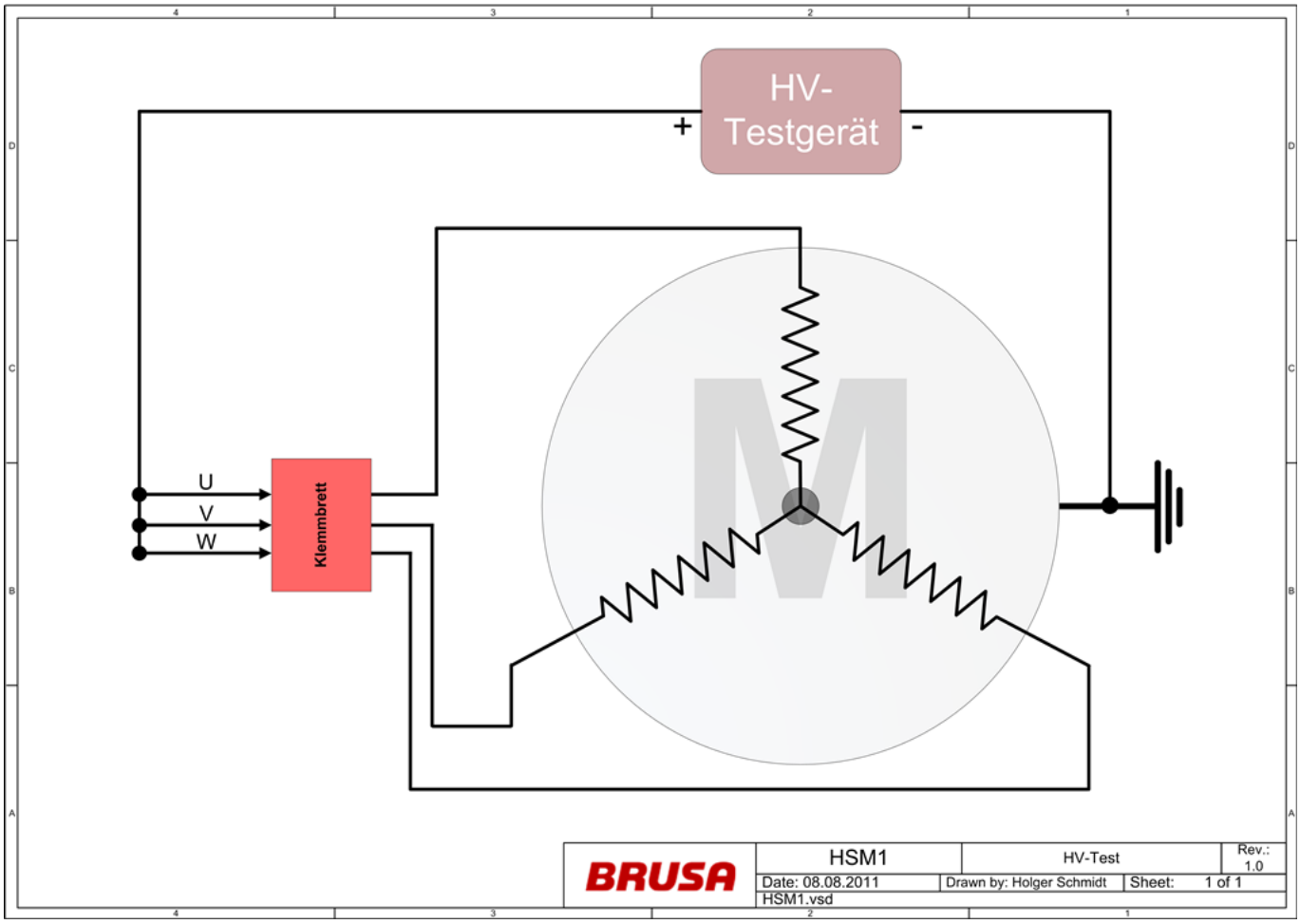

PROCEDURE STEP	ILLUSTRATION / OTHER INFORMATION
7. Connect the HV measuring device as is demonstrated in the diagram above: HV- to the ground connection of the motor. HV+ to the phases U, V, W.	---
8. Set the test voltage on the HV measuring device to 2000 V_{AC} (2800 V_{DC}). The test duration after reaching the test voltage (2000 V_{AC} or 2800 V_{DC}) is 5 seconds. Rampe T_{rise} / T_{fall} = 2 seconds.	---
9. Switch the HV measuring device on and carry out the test. Note the test result. Max. Leakage current = 15 mA	---
10. Switch off the HV measuring device. Disconnect the HV measuring device from the motor.	

In the event of a negative test result (leakage current > 10 mA), the phase cables and the phase connections to the terminal block must be checked for damage. If no damage or short-circuit is apparent, the motor must be examined by the company BRUSA. For this please refer to the manufacturer address given in chapt. *4.6*.

9 Error correction

As the motor does not have its own control architecture, control faults are always set by the connected inverter. Use the technical information of the inverter as an aid in the event of any faults occurring. If you cannot find an appropriate solution there, please contact BRUSA support at the manufacturer address given in chapt. *4.6*.

Likewise, if mechanical problems or direct damage to the motor should occur in spite of our high quality standards, we would ask you to refer directly to our support team.

10 Flooding in the device

DANGER	
	**If there is water in your device, take the device out of operation immediately!** **Disconnect the supply voltage and all other connections!** Check the housing on damage and also the insulation of the HV-cables! Please refer to BRUSA support at the manufacturing address given in chapter *4.6*

11 Maintenance

DANGER
High voltage! **Danger to life!** Even when the HV supply is switched off, a turning motor can still produce voltage! In general, disconnect the HV supply before starting work on the motor and ensure that no voltage is live in the components in question!

11.1 Changing the O-ring connection box

PROCEDURE STEP	ILLUSTRATION / OTHER INFORMATION
1. Disconnect the HV supply. Ensure that there is no high voltage present.	
2. Unscrew the screws (1). Take the connection box cover (2) with the O-ring (3) off.	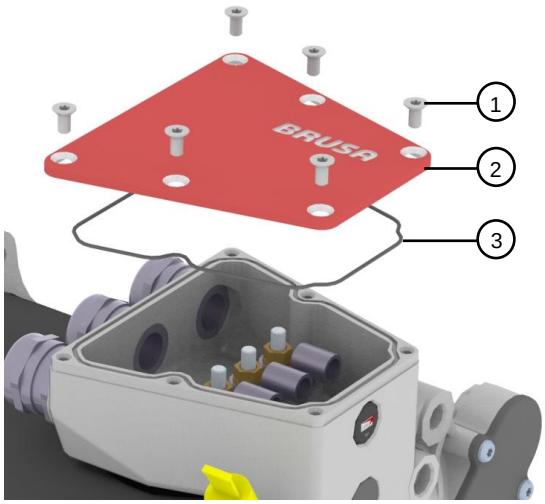
3. Clean the sealing surface (1) and the nut (2) with a suitable tool and cleaning agent. There should be no dirt particles in the nut (2).	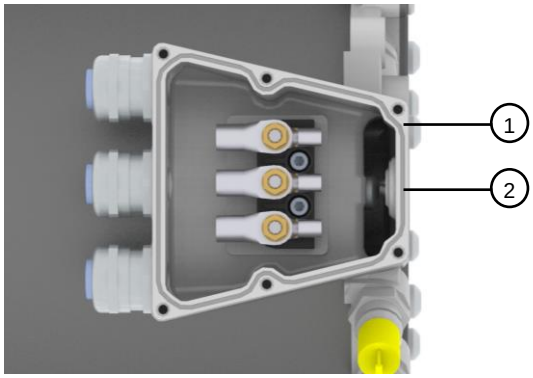
4. Put the new O-ring in the cleaned nut.	---
5. Position the connection box cover carefully. Tighten the screws. Torque = 5 Nm	---

11.2 Changing the terminal board

PROCEDURE STEP	ILLUSTRATION / OTHER INFORMATION
1. Disconnect the HV supply. Ensure that there is no high voltage present.	
2. Unscrew the screws (1). Take the connection box cover (2) with the O-ring (3) off.	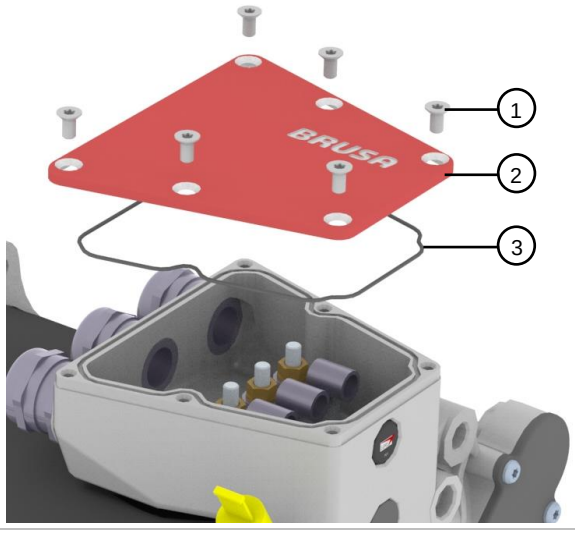
3. Loosen the screws (1). Take the screws (1) with washers (2) out. Remove the phase cable (3).	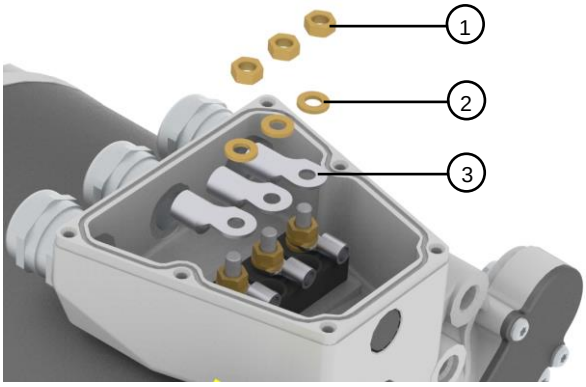
4. Loosen the screws (1). Take the screws (1) with washers (2) out. Remove the cable lugs (3).	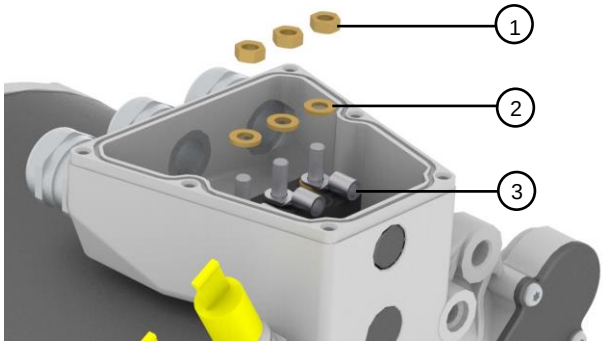

PROCEDURE STEP	ILLUSTRATION / OTHER INFORMATION
5. Remove the washers (1).	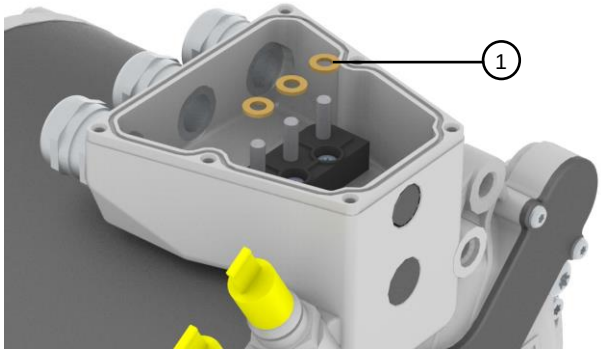
6. Loosen the screws (1). Remove the terminal board (2).	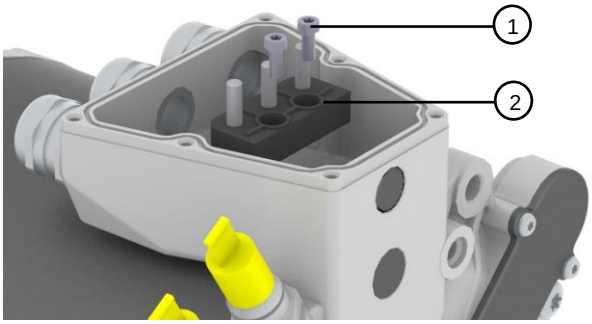

INSTRUCTION
Ensure that you connect the phases correctly! Mixing up the phases will lead to a change in the rotating direction of the motor or to malfunctions in the motor depending on the connection version.

7. Insert the new terminal board (1). The assembly takes place logically in reverse order. You must adhere to the installation sequence depicted (1) - (9). M6 Screw torque = 3 Nm M5 Screw torque = 3 Nm	---
8. Carrying out the HV Test See chapt. *8.3 Carrying out the HV test*	---

12 Spare parts

For more spare parts see chapt. *4.4 Optional delivery contents*

	NAME	PIECES	PROD. NO.	ILLUSTRATION
1.	Terminal board	1	**RAAA093**	
2.	M6 hexagonal nut (Fixing of the cable lugs to the motor phases)	1	**RAAA094**	
3.	M6 washer without DIN125A chamfer	1	**RAAA095**	
4.	M6 cable lug without insulation (Compression cable lugs for motor phases connection) ➢ **Direct purchase:** Vogt AG http://www.vogt.ch Product no: **3582A**	1	**WHAA038**	
5.	M8 cable lug without Insulation (Compression cable lug for connecting ground) ➢ **Direct purchase:** Vogt AG http://www.vogt.ch Product no: **3584A**	1	**---**	
6.	O-ring connection box	1	**MAAA355**	
7.	Bleeder screw (M6 x 10)	1	**MAAA377**	
8.	USIT sealing ring for M6 bleeder screw	1	**CJAA055**	
9.	M8 x 10 hexagonal screw (Ground GND)	1	**RAAA079**	
10.	Connection box cover	1	**11535**	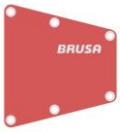
11.	Quick connection cooling water connection pieces 90° Norma PS3	1	**MHAA776**	
12.	M18 x 1.5 cooling water connection pieces for quick coupling	1	**MHAA777**	

	NAME	PIECES	PROD. NO.	ILLUSTRATION
13.	Cable glands for 13 mm - 18 mm cable diameter	1	**RAAA040**	

13 Warranty and guarantee

The warranty corresponds to the regulations in our currently valid general terms and conditions see under www.brusa.biz/en/support/terms-conditions.html.

14 Instructions regarding disposal

A basic requirement for the re-use and recycling of used electronic devices is the correct disposal.

With the implementation of the electric and electronic device regulation (ElektroG), since 24 March 2006, electronic devices may no longer be disposed of along with ordinary household waste but must be separately collected and recorded by a specialist services.

Disposal through a specialist service significantly helps to avoid dangers to people and nature. Therefore, in the case of disposal, we recommend contacting a recognised specialist disposal service.

15 Index